ZW3D WHAT'S NEW

V 2016

ZW3D Software Co., Ltd

ZW3D™ V2016 What's New

Contents

Highlights of ZW3D 2016

Basics： New PMI Annotation

Long Name Support

Translator： Supported Versions Update

CAD： New Weak Dimension Functionality

New 3D Sketch

Better Boolean

Stronger "Direct Edit"

Upgraded Geometry and Feature Pattern

Varied Configurations Coexisting in One Assembly

Upgraded "Alignment"

New Way for Assembly Cut

New "Swept Flange"

Upgraded "Close Corner"

Quick "Mark Bend"

More Powerful "FTI" for Unfold

New "Crop View" for Partial View

Upgraded BOM

New "Auto Balloon"

CAM： ...

Note: Important enhancements in this article are marked with★

Basics

★New PMI Annotation

PMI (Product and Manufacturing Information) is the 3D annotation you create and attach to 3D entities in a part or assembly under part/assembly context. Just like what we use the drawing sheet to do, PMI can gives out all the technique info directly on the 3D entities but in more intuitive and vivid way, so that you may not need a drawing sheet anymore if it satisfies you, which will be a great time saver. Besides that, PMI can be inherited by the views as their dimension in drawing sheet, which you do not need to dimension the view again.

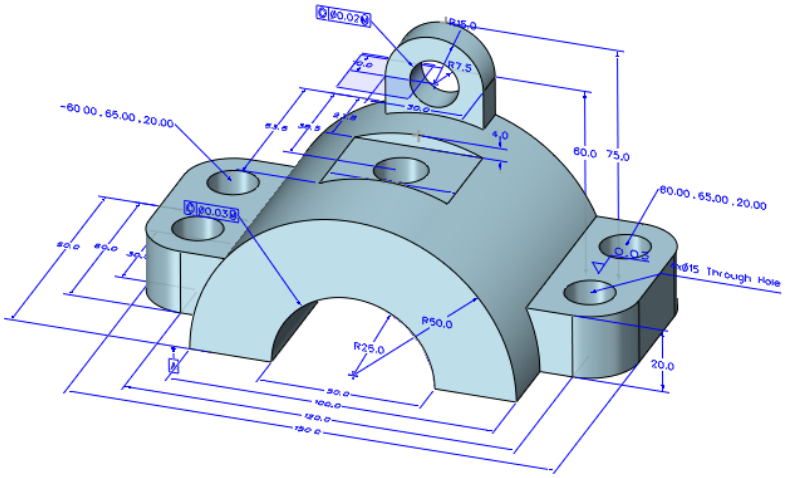

Here are the PMI dimensions currently supported.

- ✓ Linear Dimension
- ✓ Angular Dimension
- ✓ Radial/Diametric Dimension
- ✓ Datum Feature
- ✓ Datum Target
- ✓ Feature Control
- ✓ Surface Finish
- ✓ Label

Most PMI commands are similar to the one found in Drafting. You can use those commands just like the one in drawing sheet, except you need to pay attention to the insert plane for locating the dimension. The dimension will be projected to the insert plane you picked if it is possible.

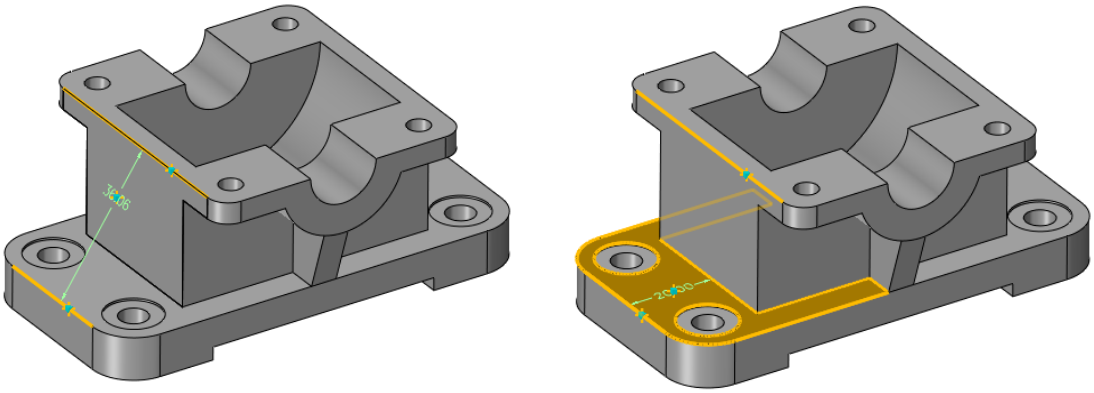

You can set up the dimension attribute to control how the PMI dimensions look like through Tools Ribbon > Attribute > PMI Dimension, which is very much alike to the one in drawing sheet.

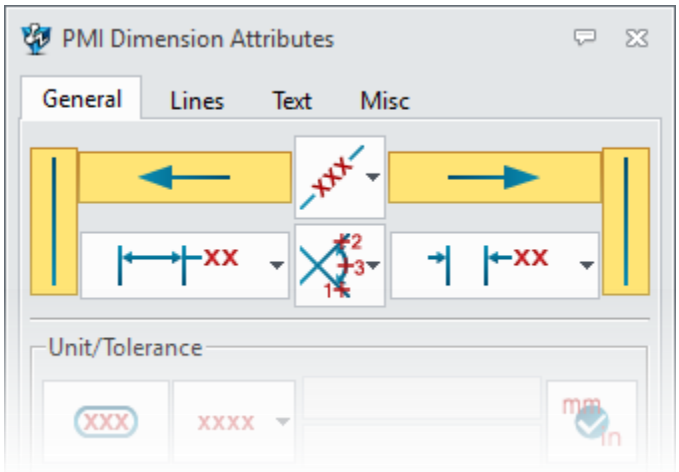

View manager is updated to contain and organize PMI objects. You can control how the PMI dimensions are arranged by the views through the right-click menu of the root node “View”:

- **Only display PMI in active view** – whether PMI dimensions from other inactive view are able to see.

- **Only attach PMI in one view** – whether one PMI dimension can be controlled by different views.

PMI dimension can be relocated among views by the commands of the right-click menu.

To inherit PMI dimensions on a drawing view, you just need to check on the checkbox of "Inherit PMI" option on view's attribute form.

Although you can add PMI dimensions anytime anywhere you like, and PMI dimensions will update along with the change of their parent entities, it's recommended that you add PMI after you have finished your part design, in case some of the entities referred by PMI dimensions get erased during part change causing PMI dimensions dangling.

➔ Where to Find

Part context > PMI Ribbon

Part context > View Manager

★Long Name Support

This long name support removes the name length restriction of 32 ASCII characters on file name, object name and component name, which means you can name the file or object as the way you like as long as your OS supports.

Long name will be truncated by using "…" to replace some words of the name to fit the widget but only just for display. The name isn't changed. For example, parts and sub-assemblies with long name are listed and displayed their names basing on the width of the assembly manager as the following picture shows.

Any foreign files with long names like assembly files from CATIA will be kept as what they are named.

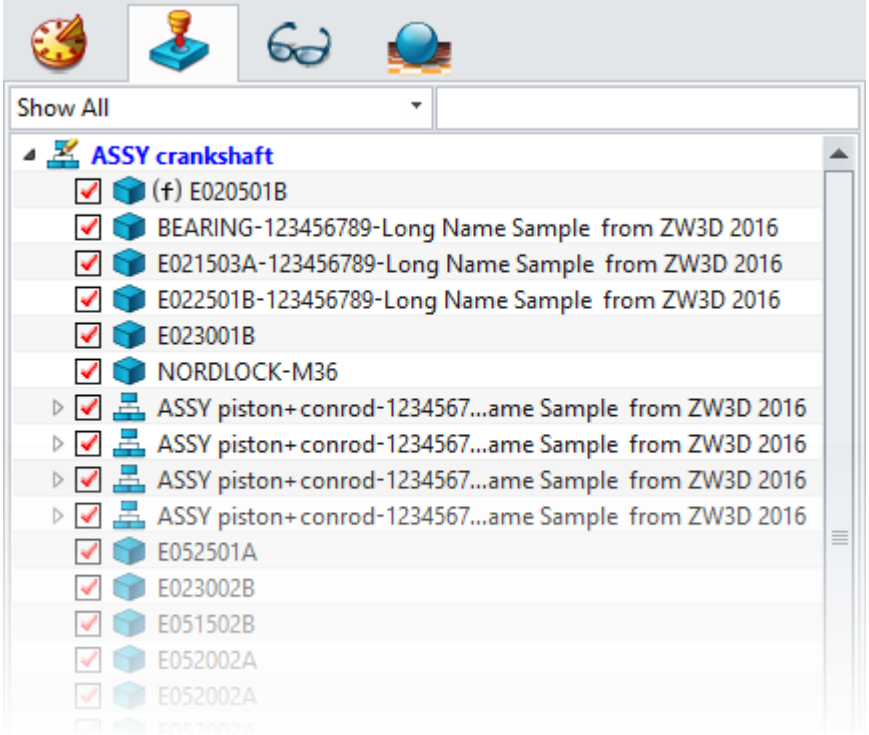

New Role Management for UI

To continue…

New "Peak Point" in Point Picking

When the outline of a part is curved, it is hard to get the outmost point to do things, like dimensioning the height and the width of the part shown in the following picture. This new "Peak Point" command for point picking is meant to do this.

"Peak Point" only works under 2D context, like Sketch and Drawing sheet, and can find out the 4 outmost points with specific directions: Top, Bottom, Left and Right.

Under sketch context, when you are drawing some entity by picking point, you can activate this command through the right-click menu to pick some outmost point of a curve. Similar behavior is provided in drawing sheet context, like dimensioning and drawing.

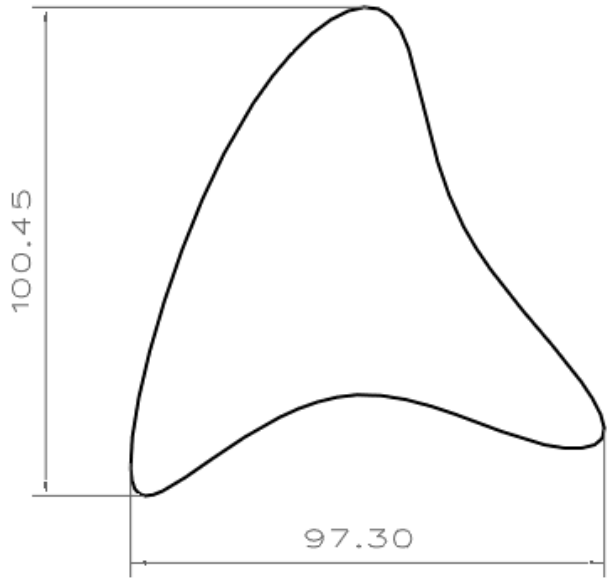

➔ Where to Find

Sketch context >  on blank area during drawing > Peak Point

Drafting context >  on blank area during drawing or dimension > Peak Point

Enhanced "Pick Extend List"

"Pick Ext List" are providing more options for you to control the selection scope. Here are some details.

- ✓ **Part Only** – only the active part's entities except components can be selected.
- ✓ **Part and Component** – only the active part's entities and its child components can be selected.
- ✓ **Entire Assembly** – the active part's entities and its child components, and components from its parent assembly are available to select.

➔ Where to Find

Part/Assembly context > Selection Bar > Pick Ext List

Make Active Object Top Priority during Picking

When you in-place edit a component under its assembly context, the entities and child components of this active component will be the first choice if your cursor hovers over the overlapped area of this component and other inactive components.

When you pick one entity from the overlapped entities to dimension, the one from active sketch will be the first choice, not the one from outside of the sketch.

Translator

Import

★New Graphic Format Import Support

3 kinds of graphic formats are newly supported:

- ✓ .CGR, .3DXML from Catia V5/V6
- ✓ XCGM

Restore to Support JT Import

ZW3D 2016 has restored to import JT files with JT 8 or JT 9 version.

★Supported Versions for Import

Versions marked in red are the newest update.

Import Formats	Extension	Supported Version
Catia V4	.model, .exp, .session	4.1.9 – 4.2.4
Catia V5/V6	.CATPart, .CATProduct, .CGR, .3DXML	V5R8 – V5R25 and V5-6R2012 – **V5-6R2015**
NX(UG)	.prt	11- **NX 10**
Creo(Pro/E)	.prt, .prt*, .asm, .asm.*	16 – **Creo 3.0**
SolidWorks	.sldprt, .sldasm	98- 2015 (only 64bit)
SolidEdge	.par, .asm, .psm	V18 – **ST8**
Inventor	.ipt, .iam	Up to **V2016**
ACIS	.sat, .sab, .asat, .asab	R1 – **2016**
DWG	.dwg	R11 - 2013
DXF	.dxf	R11 - 2013
IGES	.ige, .iges	
STEP	.stp, .step	203, 214
Parasolid	.x_t, .x_b, .xmt_txt, .xmt_bin	**Up to 28.0**

VDA	.vda	
Image File	*.bmp, *.gif, *.jpg, *.jpeg, *.tif, *.tiff	
Neutral File	*.z3n, *.v3n	
PartSolutions	*.ps2, *.ps3	
STL	*.stl	
3DXML	.3dxml	V4.3
XCGM	.x cgm	R2012-2016 1.0

Note: SolidWorks 2015 version is only supported on 64-bit OS. 32-bit is not supported.

Settings Changes for Import

1. **New "Import Mode" option**

   - ✓ Normal – same with previous version to directly import and comvert Brep data into Z3.
   - ✓ Quick Import – graphic and Brep data both are imported, but Brep data is only converted into ACIS format.
   - ✓ Quick View – Only graphic data and assembly structure info is imported, which make it the fastest.

     Graphic data is just for viewing for now. You can't use them to model, but you can export it into STL file.

2. **More settings for NX import**

   - ✓ New "Hidden entity" option
   - ✓ New "Suppressed Component" option
   - ✓ New "Sheet Body" option

3. **ProE format supports to import "Suppressed component"**

4. **SolidWorks format supports to import "Hidden component" and "suppressed component"**

Export

Supported Versions for Export

Versions marked in red are the newest update.

Export Format	Extension	Supported Version
Catia V4	.model,	4.1.9 – 4.2.4
Catia V5	.CATPart, .CATProduct,	V5R15 – V5R25 and V5-6R2012 – **V5-6R2015**
ACIS	.sat, .sab, .asat, .asab	R1 – **2016**
DWG	.dwg	R11 - 2013
DXF	.dxf	R11 - 2013
IGES	.ige, .iges	
STEP	.stp, .step	203, 214
Parasolid	.x_t, .x_b, .xmt_txt, .xmt_bin	7.0 ~ 28.0
VDA	.vda	
Image File	*.bmp, *.gif, *.jpg, *.jpeg, *.tif, *.tiff	
Neutral File	*.z3n, *.v3n	
PDF	*.pdf	
STL	*.stl	
WRML File	*.wrl	
HTML File	*.html, *.htm	

Miscellaneous

1. Tweaked STEP export to improve the assembly model export quality.
2. Points and curves are supported in STEP export.

CAD

Sketch Design

★New Weak Dimension Functionality for Quick Full Constraint in 2D

The weak dimension is a driven dimension comparing to the strong dimension i.e. driving dimension. It is automatically generated during each operation basing on the rule to fully constrain the sketch if “Add Weak Dimension Automatically” mode is turned on. If you add a constraint or dimension that conflict with the automatic weak dimension, the weak dimension will be deleted.

Since the weak dimensions are added basing on full constraint principle, it is a good way to use the weak dimension to add all the necessary dimensions to constraint the sketch during drawing, then converting weak dimensions into strong one to really constraint sketch at the end, if you like the sketch to be fully constrained. Entities with weak dimensions can be dragged to resize and relocate, which would give you great freedom and help to modify with weak dimension indicating the change of their size and distance.

You can convert the weak dimension into the strong one by the “Switch to Driving Dimension” command from its right-click menu to truly fully constrain the sketch. And this conversion can’t be reversed. Editing the value of the weak dimension also will do the conversion.

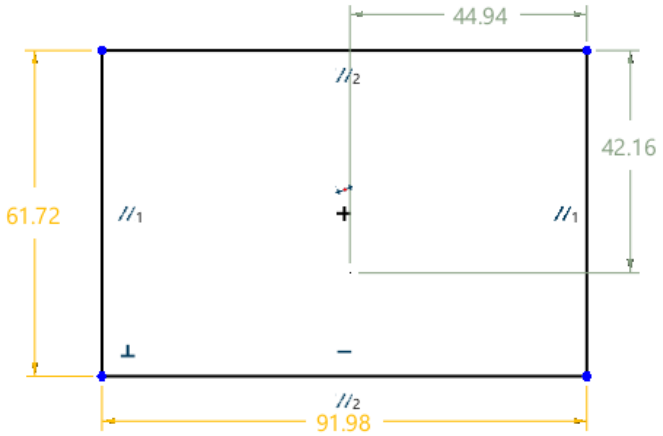

➔ Where to Find

Sketch context > Quick Access Toolbar > Add Weak Dimensions Automatically

New “Pattern” Constraint

“Pattern” constraint is to maintain the size and position relation between the pattern instances and the original entities. When changing the size or the position of the original entities, the pattern instances will change along.

Deleting one of the pattern instances will erase the pattern constraint.

✓ Pattern constraint for single direction pattern

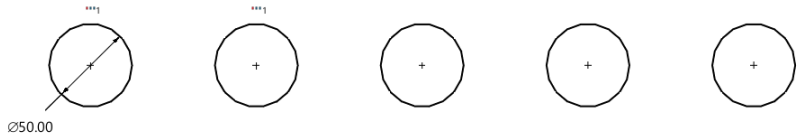

✓ Pattern constraint for 2-direction linear pattern

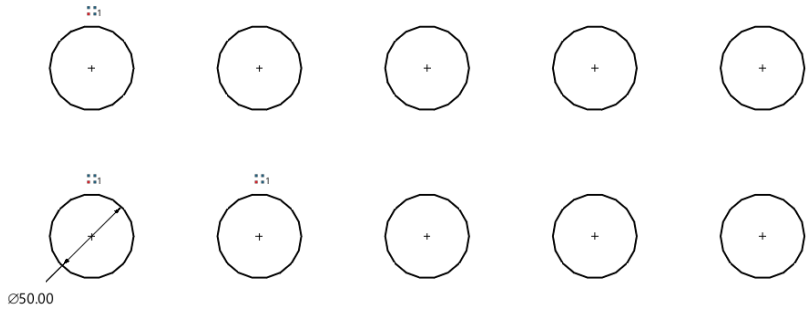

✓ Pattern constraint for circular pattern

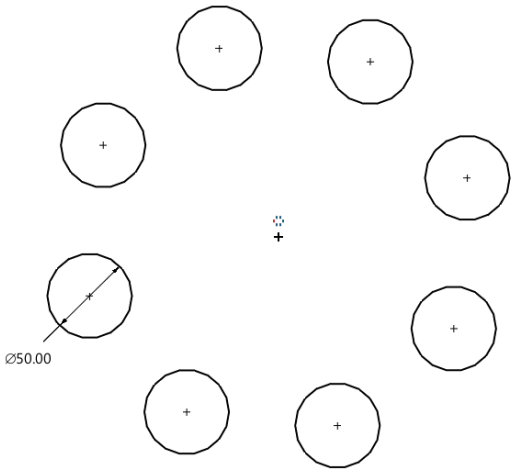

➔ Where to Find

Sketch context > Sketch Ribbon > Pattern

★New 3D Sketch

The common 2D sketch has everything projected into the sketch plane and constrains all geometries within leaving only 2 dimensions to manipulate. Now there is another new one, 3D sketch, within which everything are 3 dimensional and free to snap or constrain to any faces or 3D wireframe entities.

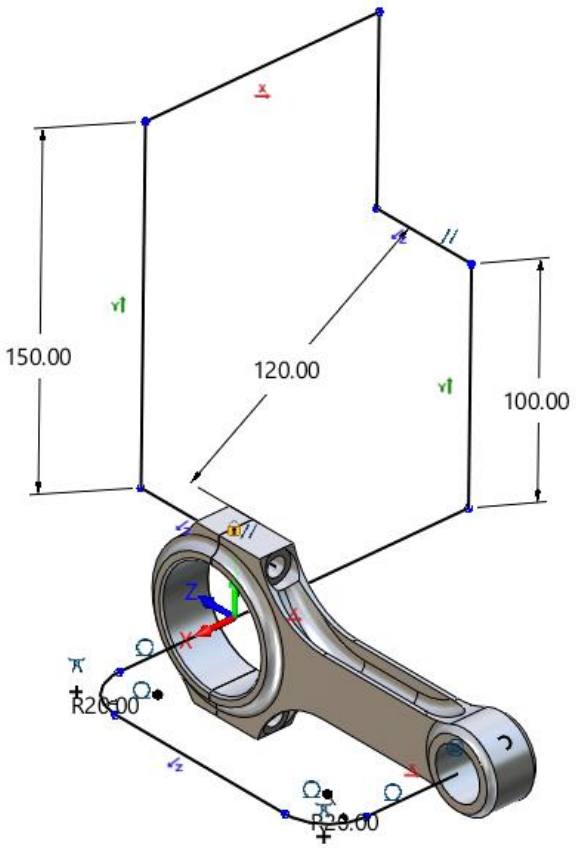

3D sketch entities are alike wireframe. You can find that the commands to create them under 3D sketch context can be used just in the ways as how the wireframe does, except all entities created will be enclosed in one 3D sketch feature just like the 2D sketch. During drawing, critical point snap will be turned on by default just like drawing a wireframe entity. “Smart Point Ref” function also is supported and shares same setting with wireframe.

Constraints in 3D sketch works very much like the one in 2D sketch, except they can be works with 3D entities directly without any projection. Along X, Along Y and Along Z are 3 newly added constraints which will make the line always parallel with corresponding X/Y/Z axes. “On Plane” constraint is used to constrain a curve onto a plane, which all points of the curve will be on the plane. Auto constraint snap will be turned on to assist your drawing. You can turn down the inferred constraint by clicking Shift just which is same thing in 2D sketch.

A 3D sketch can be used as a Profile for commands like Extrude to do what the 2D sketch does, and as a continuous Path for commands like Sweep to do what the curve list does, and generates numerous curves like wireframe but in one feature.

➔ Where to Find

Part/Assembly context > Shape Ribbon > Insert 3D Sketch

Part/Assembly context >  on blank area of the graphic area > Insert 3D Sketch

Configurable Constraint Color

The new “Constraint Color Settings” form allows you to customize your own color scheme for each constraint status. Here are things you can get from this form.

- ✓ Set up a color for each constraint status.
- ✓ Turn on/off the visibility of each constraint status with the checkbox.
- ✓ All open sketch share same settings since it’s a global setting.
- ✓ The settings will be saved and reused in next ZW3D startup.

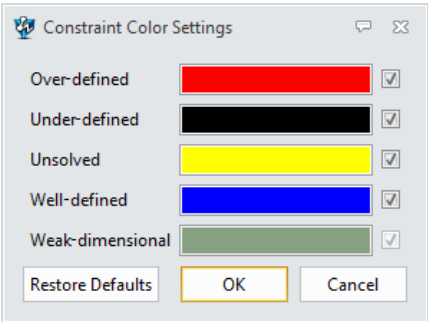

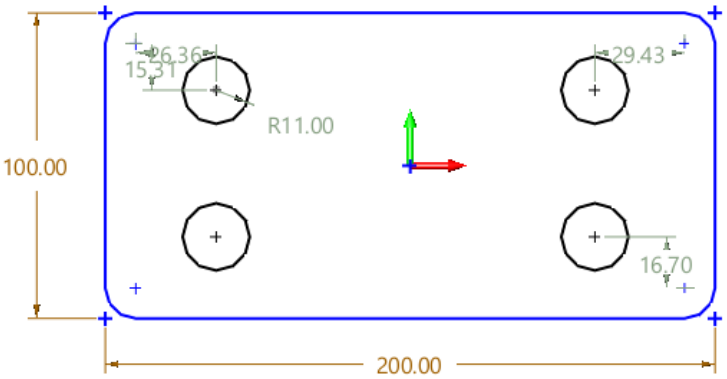

Constraint status is turned off by default which you can turn it on through “Configuration > 2D > Display constraint status color” option.

➔ Where to Find

Sketch context > Tools Ribbon > Attributes > Constraint Color Settings

Configuration > 2D > Display constraint status color

New “Minimum Radius”

“Minimum Radius” is to find out which entities carry the minimum radius.

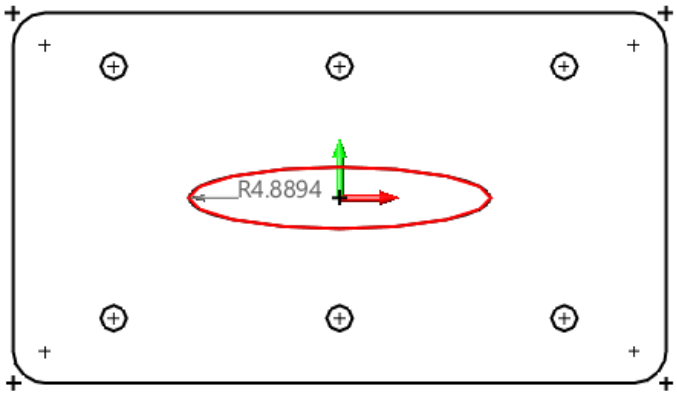

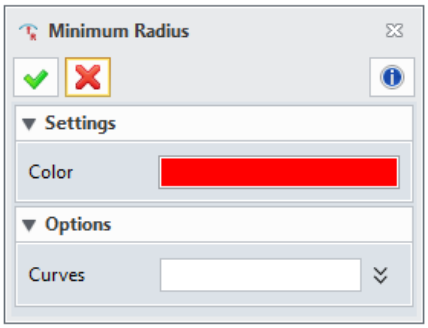

➔ Where to Find

Sketch context > Inquire Ribbon > Minimum Radius

Miscellaneous

1. **"Through Point Curve" supports to generate a curve from 2 points**

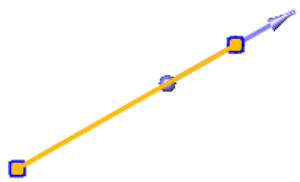

2. **New X/Y direction on the right-click menu of the curve handle for "Through Point Curve"**

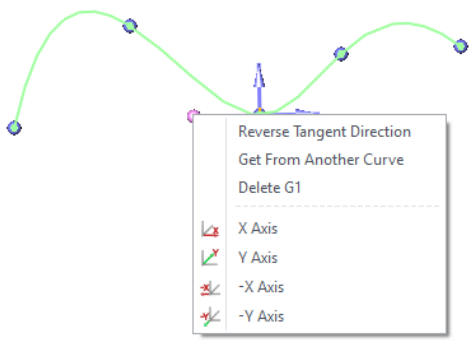

3. **"Curve" in "Reference" command can pick a face to refer all its edges**

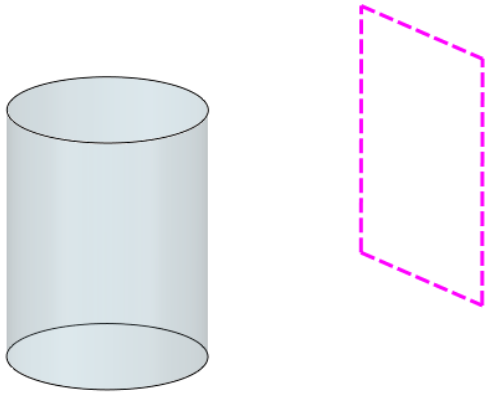

Part Design

Enriched History Manager

1. **Composite history tree for more behavior support.**

✓ New "Explicit Objects" node

STL entities and Point blocks will be listed here.

✓ New checkbox on each tree node to direct show/hide or suppress/unsuppress

- No tick on box means suppression.
- Grey name with tick on box means hidden.
- For geometry nodes like nodes under Solid folder, single click on checkbox means to show or hide the corresponding geometry, while for history feature it means to suppress or unsuppress the selected feature.

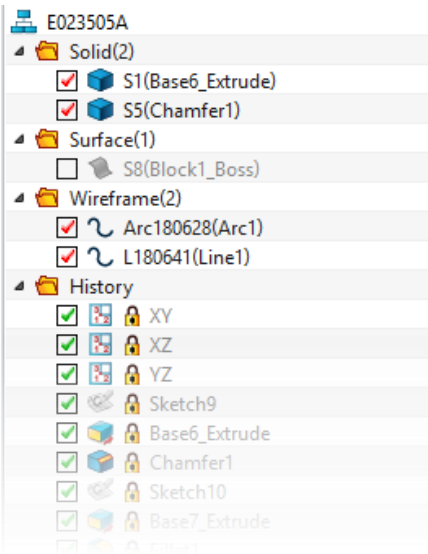

✓ Right-click menu is provided for the folder nodes.

For geometry folders like Solid, you can hide or show all the entities within at one time, or delete all of them.

For the feature folder, you can copy/cut/paste, suppress/unsuppress all the features within.

✓ Equation name on the history node supports to rename

Just right-click on the equation name on the history, and use the “Rename” command from the right-click menu.

2. **Missing Entities Reminder in History Manager**

Redefinition operations would change some geometries greatly, even erase some entities unintentionally, causing downstream features losing their objects and failing to replay. When redefining the failing features, it would be very helpful to show up the missing objects to guild users to identify which and where those objects are. And that is what ZW3D 2016 can offer.

If you want to use this functionality, you need to turn on the option “Configuration > Part > General > Backup geometry data of each feature”. Then all new features will be record necessary data from features’ object. Features from saved files by pre 2016 version need to replay the model history first.

➔ Where to Find

Configuration > Part > General > Backup geometry data of each feature

3. **Feature Dependency includes referred variables**

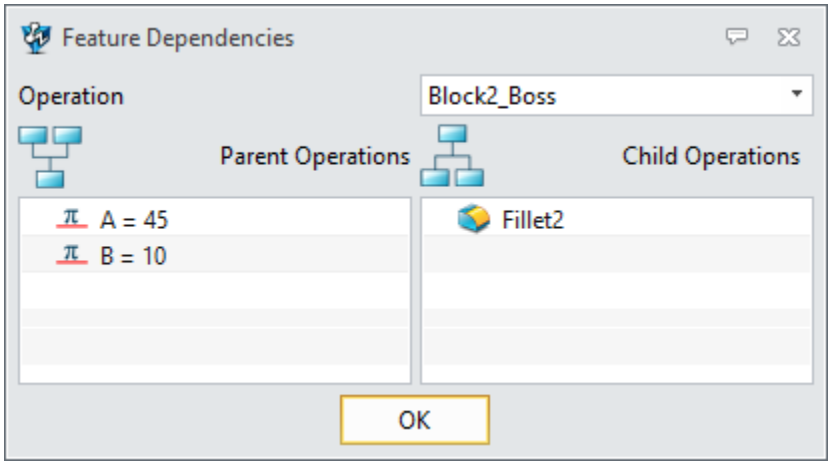

Extended “Part Config” to Support Assembly

Besides configuring variables, modeling features and their parameters, “Part Config” now can work on assembly components and assembly features like assembly pattern, which means you

can set up different assembly configurations consisted of different components for one assembly.

You can pick out modeling features or variables from the history tree through the “Configure XXX” command on their right-click menu, and put them into “Part Config” form as one configuration item. As for assembly components and features, same operation can be done on the assembly tree.

All changes done to the configured items on the history or assembly tree will be recorded into corresponding “Part Config”. Modification on each configured items on the part config form will synchronize the ones on the history or assembly tree.

➔ Where to Find

Part/Assembly context >  on node of history or assembly > Configure…

★Improved Boolean

✓ **Better with Coincident Faces**

Boolean intersection on coincident faces can be very challenging, but it is quite common like in a mold design. Identical coincident faces are one example of this issue as the following picture shows. Now it have been improved and is more robust.

2 Shapes with Coincident Faces	Trimming Result with Blue as Cutter
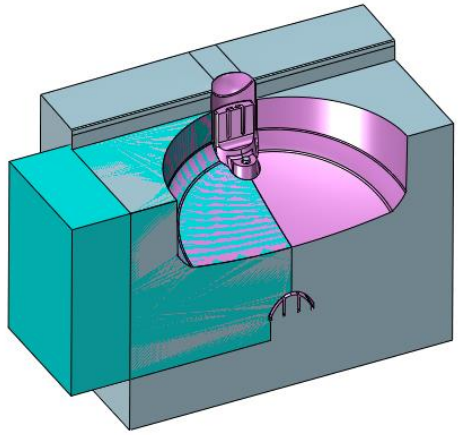	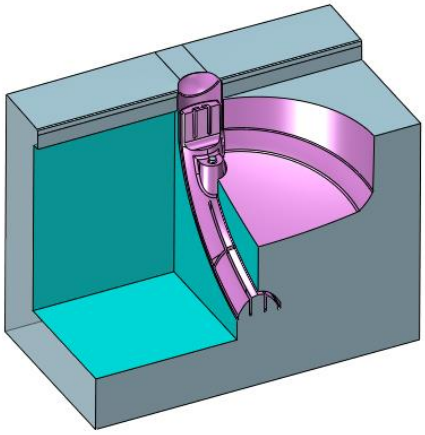

✓ **Better Surface/Surface Intersection with Tangent Faces**

3 Shapes before Boolean	Boolean Result
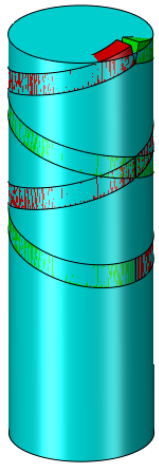	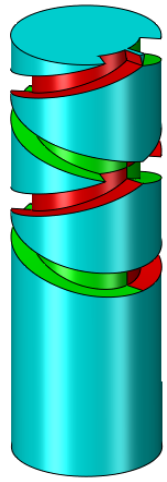

★Stronger "Direct Edit"

1. New "Align Move Face"

Relation between 2 objects is a good and visual concept to apply as a tool to manipulate these 2 objects, like the constraint in sketch and the alignment in assembly. Now "Direct Edit" also takes this in and provides you with this new "Align Move Face", which you can modify the face in an intuitive way basing picked face relation.

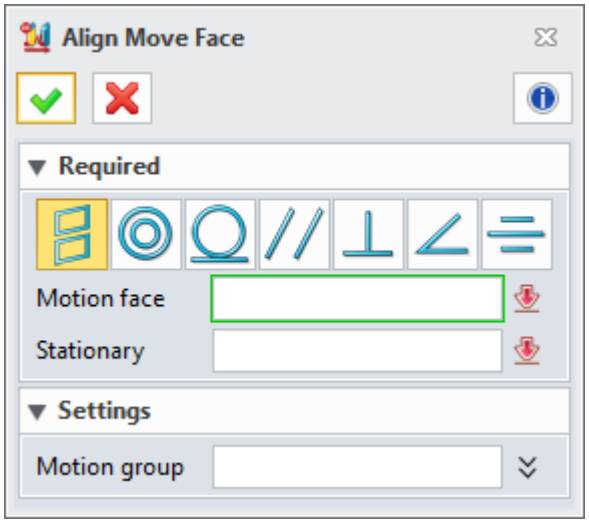

✓  Coplanar -> supported faces: Planar

Red face modified basing on Green one

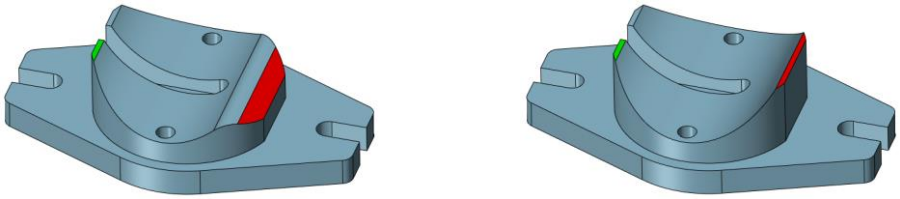

- ✓  Concentric -> supported faces: Planar

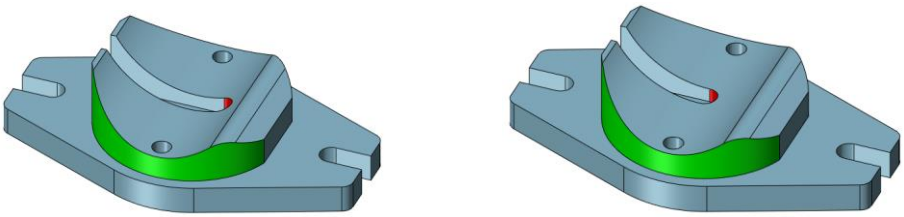

- ✓  Tangent-> supported faces: Planar, Cylindrical, Conical, Spherical, Torus

- ✓  Parallel -> supported faces: Planar, Cylindrical, Conical

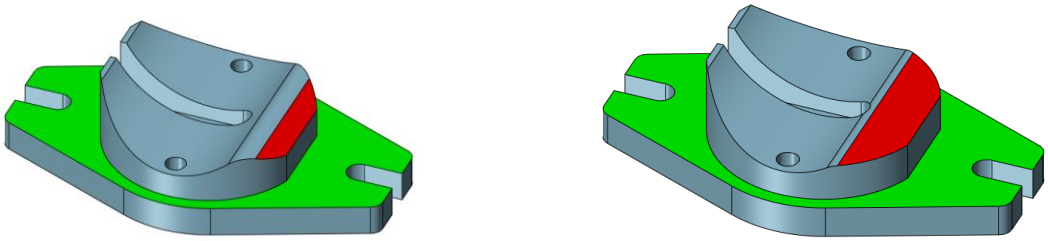

- ✓  Perpendicular -> supported faces: Planar, Cylindrical, Conical

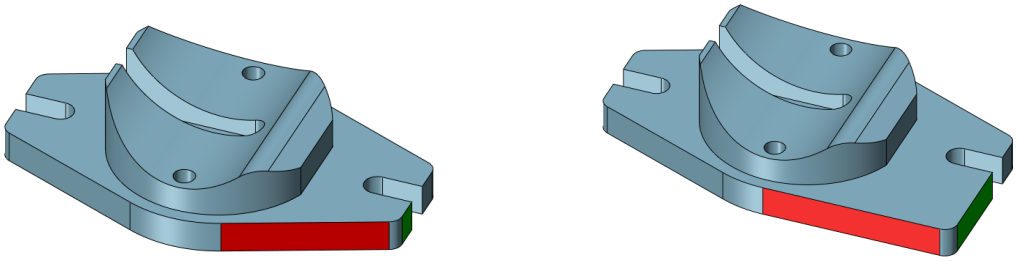

✓  At Angle -> supported faces: Planar, Cylindrical, Conical

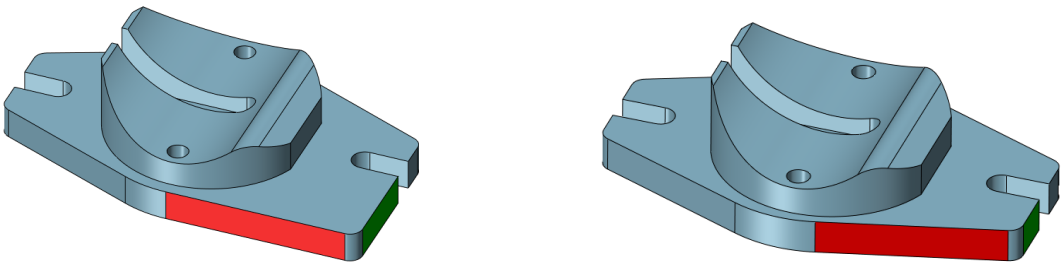

✓  Symmetric -> supported faces: Planar, Cylindrical, Conical, Spherical, Torus

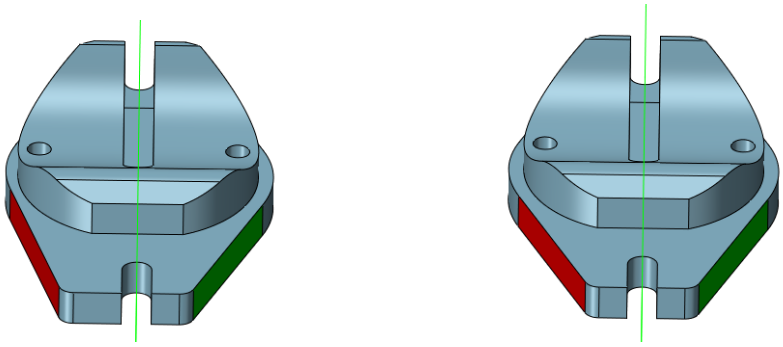

2. Better "Direct Edit" on Tolerant Vertices

Tolerant vertices, i.e. edges don't meet at one exact point on a corner, can be found on some imported foreign models. Extra measurements need to consider and perform when "Direct Edit" works on such cases, which you can find the outcome of these efforts in ZW3D 2016 with more robustness and success rate.

Shapes with Tolerant Vertex	DE Face Offset on Red Face

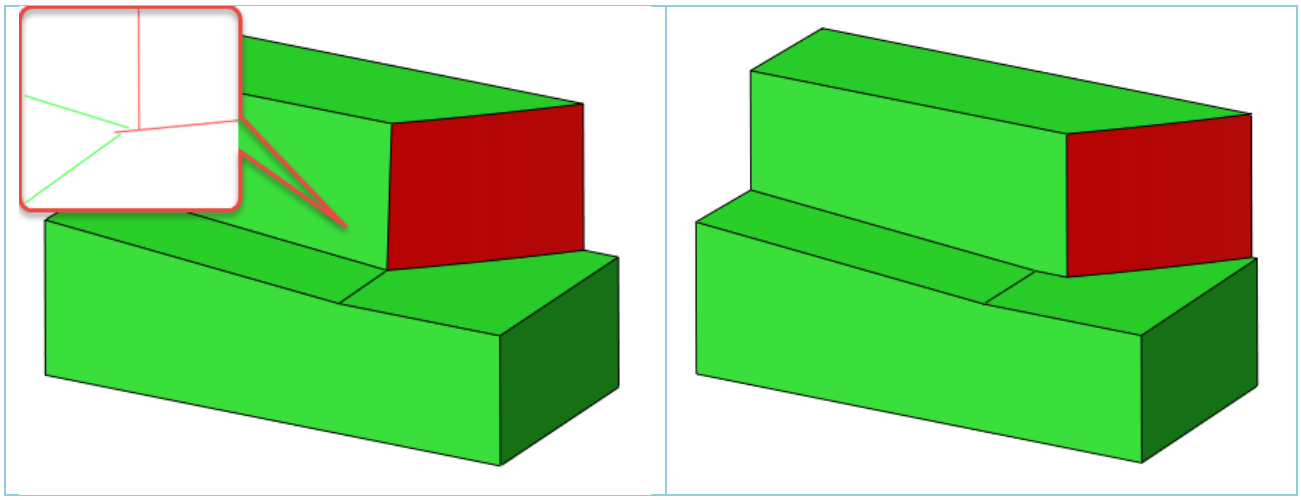

➔ Where to Find

Part context > Direct Edit Ribbon

Tweaked "Sweep"

"Sweep" has tweaked to present a more understandable form and offer more options to control the profile orientation along the path during.

1. Changes in form

✓ Preview enhancement

There are 2 build-in frames during sweeping. One is the reference frame displayed in 3D axes to indicate how the "Profile" locates originally, the other is the local frame on each point of the "Path" displayed in lines to show how each profile will be located along the "Path". Sweep puts profiles on each point of the Path by aligning the reference frame and the local frame, then blends each profile together.

- These 2 frames are shown up in preview now for you to reference. And the bold yellow arrow indicates the sweep start point.
- There are relocated profiles in blue and local frames in yellow showing along the "Path" to indicate how the "Profile" is oriented along the path for you to learn about the sweeping process.

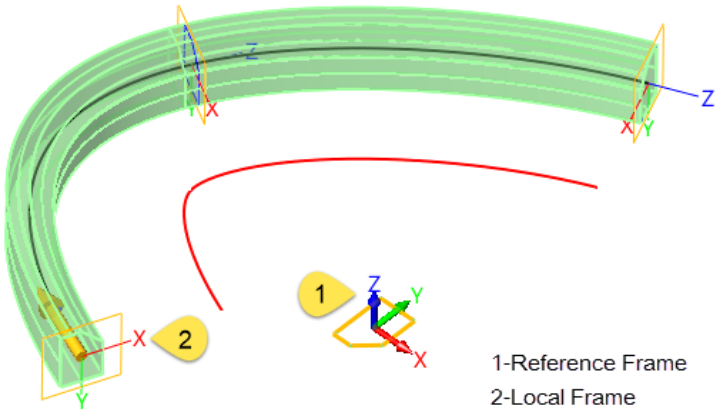

✓ Terminology changes

Fields	ZW3D 2016	Pre Version	Explanation
Frame	Default frame	Natural	
	At intersection	At Profile	The reference frame lies at the intersection of the Path and the Profile plane. If no intersection found, it lies at the start point of the Path.
	At Path	At Path	The reference frame will lies at the start point of the Path.
	Along Path		The reference frame will lies at the Profile. The Path will be relocated basing the local frame aligning with the reference during sweeping.
	Selected	Selected	
Z-axis	Tangent to Path	Natural	Z-axis will be tangent to the Patch.
	Tangent to curve	Spin	Z-axis will be tangent to the picked curve.
	Fixed direction	Parallel	Z-axis is parallel with the defined direction.
X-axis	Minimum twist	Natural	
	X-axis curve	X-axis curve	X direction is from the origin of the local frame to the intersection point between the XY plane of the local frame and the picked curve.
	Fixed direction	Guide plane	X direction will be the vector product of the picked direction and Z-axis is the direction of X-axis.
	Face normal		When this option is set, Z-axis field will be set to Tangent to Path. X direction will be the vector product of Z-axis and the face normal of the point which is closest to the origin of the local frame.

✓ Set list widget applied in Transform

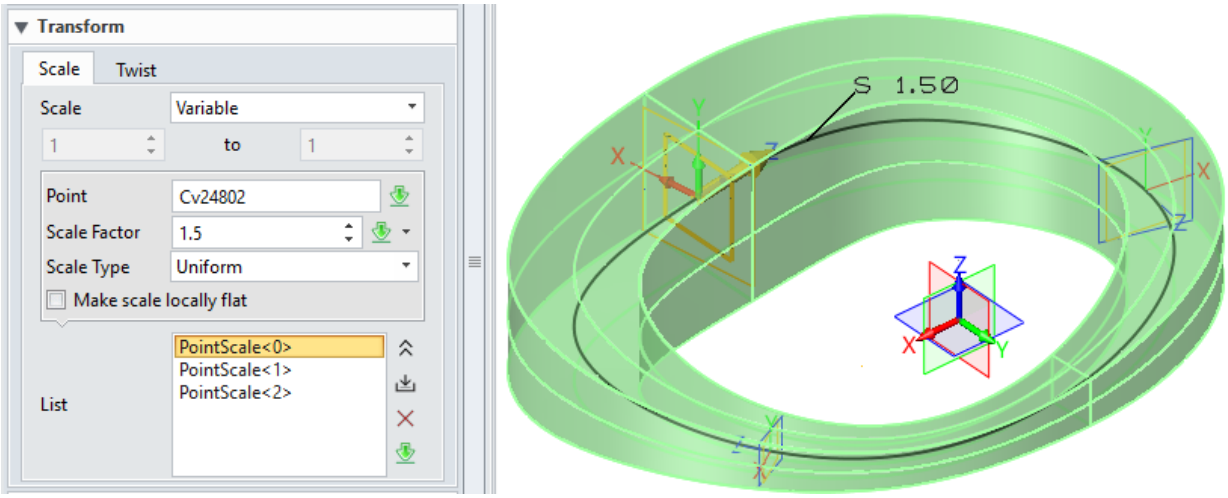

2. New functionalities

✓ New "Along Path"

"Along Path" newly-added in Frame field is like to move the Path to the Profile, then sweep the profile along the re-located Path.

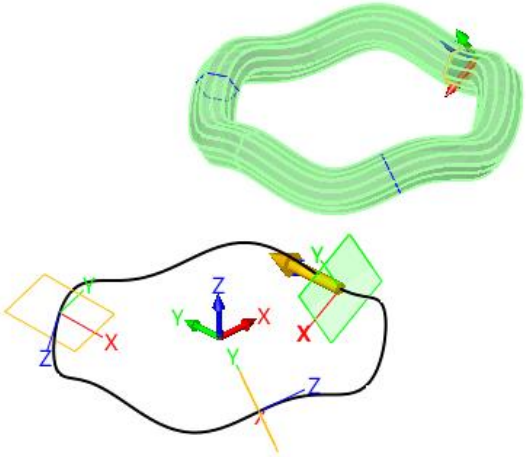

✓ New X-axis direction control "Face Normal"

With Z-axis being tangent to the Path, X direction will be the vector product of Z-axis and the face normal of the point which is closest to the origin of the local frame. In

other word, Y-axis will follow the face normal of the picked faces causing profile reoriented along the faces, like the Y-axis following conical face on the below picture.

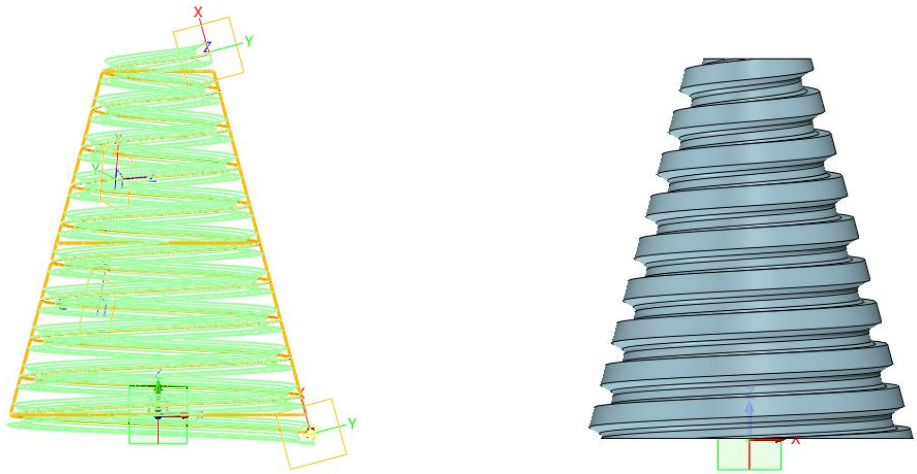

✓ New “Merge tangent faces” option

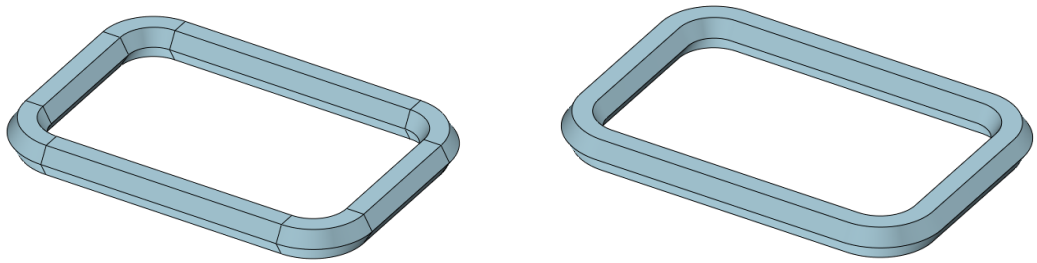

➔ Where to Find

Part context > Shape Ribbon > Sweep

★Upgraded Geometry and Feature Pattern

1. **Separated “Pattern Geometry” and “Pattern Feature”**

   Patterning geometry is to reuse the picked entities, just like “Copy” but in a defined layout, while patterning feature is to redo the feature in new layout locations. It's necessary to separate the 2 different applications into 2 individual commands, and allow them to develop respectively more characteristic functionalities as following content mentioned.

2. **New layout “Polygon”**

Polygon pattern uses the axis of an inscribed circle to lay down the instances. You can turn on the second direction, i.e. radial direction of the inscribed circle, to multiply and expand more instances.

There are 2 ways to arrange the instance, “Number per side” and “Pitch between instances”, as following pictures showing.

Number per side	Pitch between instances
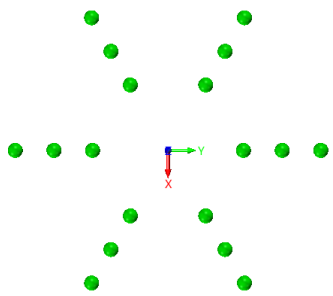	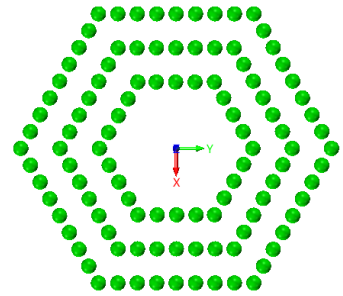

3. **New “Fill Pattern” to bound pattern instances**

Pattern instances can be toggled one by one. When a special layout need to fill, it is hard to do by toggling. “Fill Pattern” is meant to help you with this kind of scenario. You can use sketch or curves to define a profile to fill with the pattern instances, or to exclude this area leaving the rest. Face is also valid as boundary to fill.

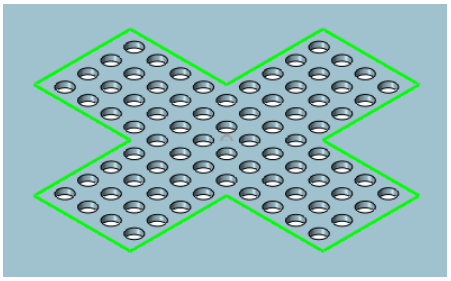

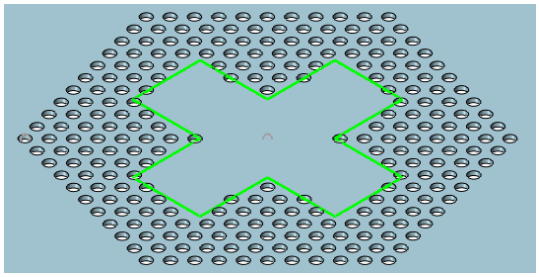

4. **New “Associative Copy” option for “Pattern Geometry”**

Static geometries will be generated if “Associative Copy” option is turned off, which all geometry pattern instances have no link with their original geometry, and the feature generated in history can’t be redefined.

5. **New “Variable Pattern” for “Pattern Feature”**

Since new features will be generated on new instance locations by “Pattern Feature”, users can change each parameters of the patterned features to make it different from the original one. There are 2 ways to do that.

- ✓ **Parameter List ->**

  Parameters of each patterned features can be directly picked on graphic area to define their increments.

- ✓ **Parameter Table ->**

  All variable parameters of patterned features will be listed directly on a table, and users can define their increments for each pattern instances.

Parameter List	Parameter Table
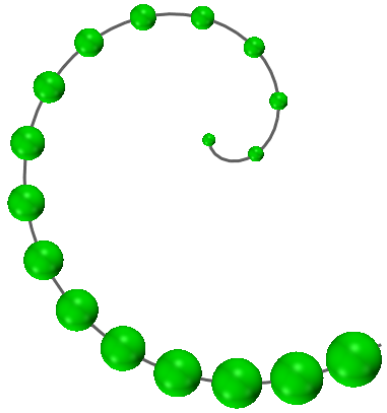	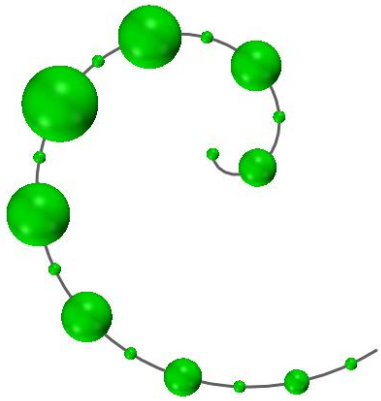

Separated “Mirror” and Dependency Break

Just like the “Pattern”, “Mirror” has been separated into “Mirror Geometry” and “Mirror Feature”.

“Associative copy” is added into “Mirror Geometry” and “Copy” commands for you to break the dependency between the original entities and the mirrored one.

New “Enlarge Face”

“Enlarge Face” can restore a trimmed face into a 4-sided face with no inner loop within, and provides 4 handles on each boundary for users to drag to change the size of the face.

Original	Enlarged

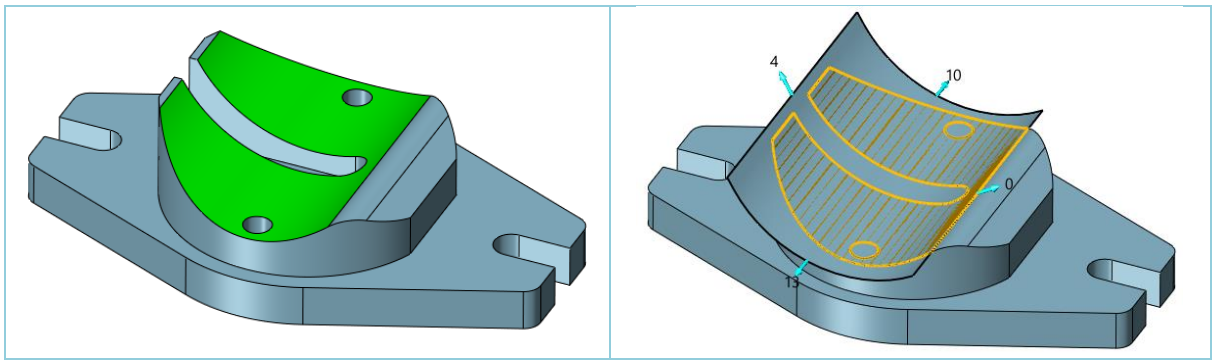

Tweaked "Hole"

1. **New "Boolean" option to generate an independent hole shape**

   This new "Boolean" option makes the hole shape not to intersect with any other shapes to generate a solid shape. Since the hole info will pass on after Boolean, a "Hole" feature can be created again if you use this solid hole shape to cut other shape.

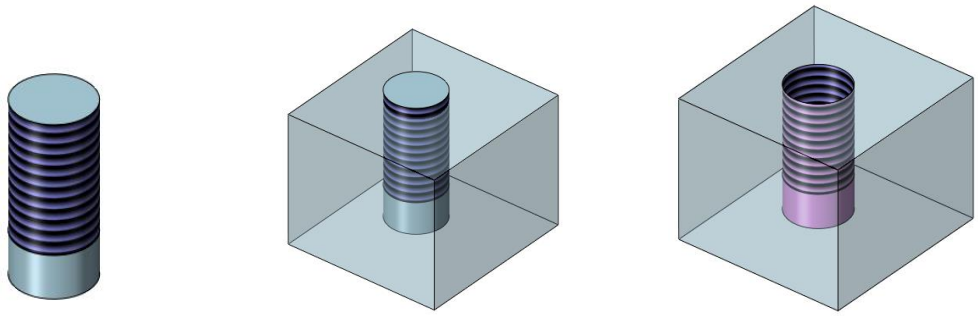

2. **Parameters of a thread hole can have expressions to define their value**

   Following parameters of a thread hole can be defined with a expression.

   Diameter, Pitch, Thrds/Unit, Depth

Miscellaneous

1. **New "Projection" option in "Inlay" to project curves directly onto faces**

2. **"Flag Ext Thread" supports to set up the size of the End Chamfer**

30 °	45°	60°
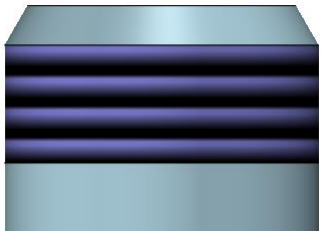	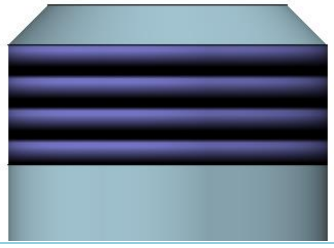	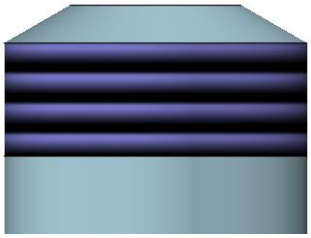

3. **Thread info will be copied with the face if the face is copied by Pattern, Mirror or Copy.**

4. **"Flag Hole" supports to recognize simple or taper hole from a combination hole shape.**

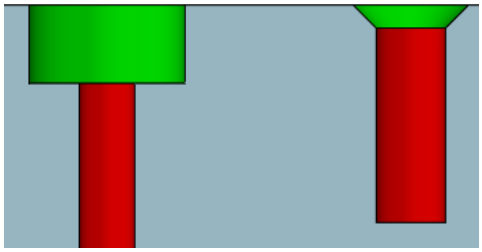

5. **New X/Y /Z direction on the right-click menu of the curve handle for "Through Point Curve"**

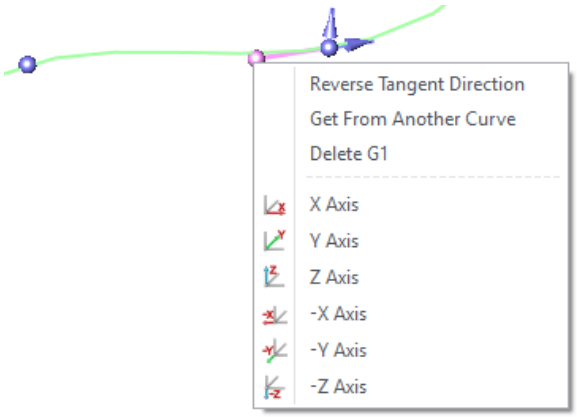

6. New "Tolerance" field for selected commands

New "Tolerance" field is added into following selected commands to facilitate custom feature tolerance.

- All commands from "Basic Shape" panel of "Shape" ribbon, like Extrude, Revolve and so on.
- Selected commands from "Engineering Feature" panel of "Shape" ribbon, like Fillet, Chamfer and Thread.
- Selected commands from "Edit Shape" panel of "Shape" ribbon, like Face Offset, Vol Offset, Shell, Replace and Simplify.
- All commands from "Basic Face" panel of "Free Form" ribbon, like Circular Bi Rail, FEM Patch and so on.
- Face-splitting related commands from "Edit Face" panel of "Free Form" ribbon, like Split with Faces.

Assembly Design

★Varied configurations of a component coexist within the same assembly

When inserting a part into an assembly, different part configurations of the part can be selected to use to fit corresponding applications. For example, a spring used at different locations inside one assembly needs different part configurations to indicate various compression status of its instances.

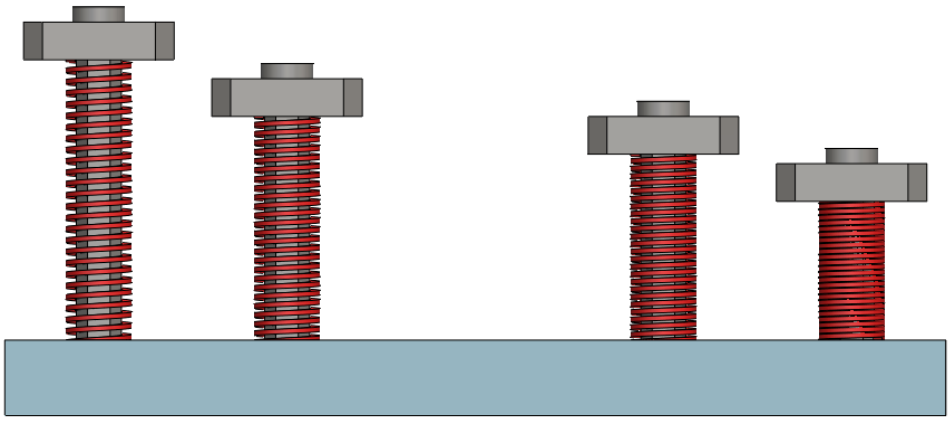

➔ Where to Find

Part/Assembly context > Assembly Ribbon > Insert > Part Config

Part/Assembly context >  component node on the assembly tree > Configurations

Enriched Assembly Manager

1. **Composite assembly tree for more behavior support.**

   ✓ New checkbox on each tree node to direct show/hide or suppress/un-suppress

   - No tick on box means suppression.
   - Grey name with tick on box means hidden.
   - Single click on checkbox means to show or hide for component nodes, while for assembly feature and constraint nodes it means to suppress or un-suppress.

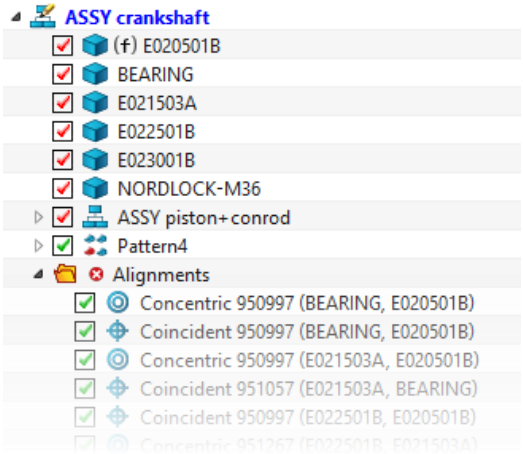

- ✓ Long component name support

2. **Direct inactive component picking during in-place part editing.**

   You can pick any inactive components to do things you like during another component's in-place editing.

3. **Direct hold down left mouse button and drag to move component in graphic area.**

   You can hold down the left mouse button and drag to move the picked component. If you like to rotate the component, hold down Shift key and the left mouse button together, then drag.

4. **Component suppression update**

   - ✓ A new conditional suppression form for you to add, edit or delete each condition expression.
   - ✓ Suppression conditions can be set up for both components and alignments.
   - ✓ Operation behaviors are just like the one in history feature.

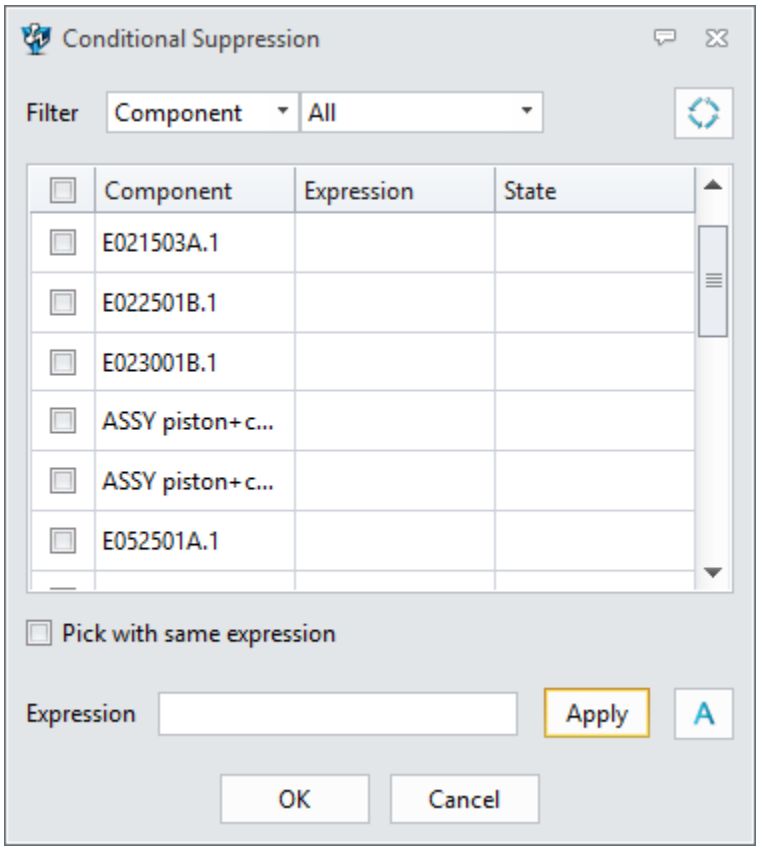

★Upgraded "Alignment"

1. More advanced alignments

✓ Symmetry

Just similar to the symmetric in sketch, "Symmetry" makes 2 entities of same type from different components symmetric about a picked plane. Valid entity can be point, line, edge, plane, planar face, sphere with equal radius and cylinder with same radius.

✓ Middle

"Middle" constraint uses the middle plane of 2 picked planar faces or planes from components, to align another middle plane of another 2 picked planar faces or planes from different components.

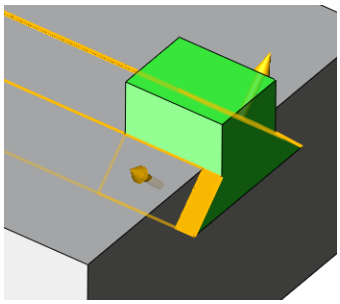

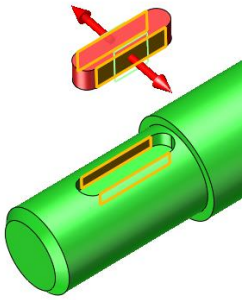

- ✓ Lock

  "Lock" constraint is used to make 2 components constrained fully relative to each other, in other word, welded together. After locked, these 2 components work like one whole subassembly. Constraints attached to these 2 components will be remained after Lock constraint is applied. "Lock" will not change the positions of these 2 components.

- ✓ Frame

  "Frame" makes 2 picked components fully constrained with each other through the picked datum planes whose X/Y/Z axes are aligned respectively. It's another way to quick bond 2 components together as a whole, besides "Lock", but will move these 2 component coincident with each other on picked datums.

2. (Not integrated)New mechanical alignments

- ✓ Path

  To continue…

- ✓ Bevel Gear support in Gear constraint

  To continue…

- ✓ Rack and Pinion

  To continue…

✓ Linear/Linear coupler

To continue…

✓ Screw

To continue…

3. New Auto Alignment

Auto alignment is used to offer valid alignments for 2 pointed entities picked by direct drag operation for users to finish their alignment work more easily. Here is the procedure.

- Left-click on the entity you like to align and hold down and drag the component to the target entity which you want the alignment to happen.
- Press down the Alt key, and release the left-click and Alt together.
- An on-screen alignment form will pop up listing all valid alignments for you to choose.

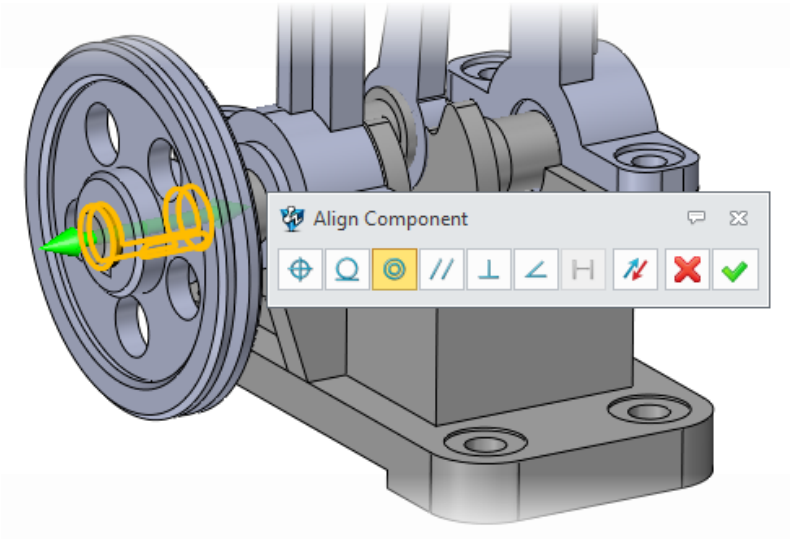

The on-screen form is also provided during “Align” command, which you can change the alignment types and finish the command more easily.

Improved “Mirror Component”

For the symmetrical part, it doesn’t need to create a new opposite hand version part for the Mirror operation, reorienting the part and putting it on the opposite side to just add a new instance will be enough, which is what the “Duplicate mirrored geometry” option tries to offer.

If you check on the “Copy” mode and uncheck “Duplicate mirrored geometry” option on Mirror operation, a mirror component feature will be added into the assembly tree, and just like the pattern component, it can be redefined, suppressed or deleted. The symmetric relation between the original component and the mirrored instance will remain as long as this mirror feature exists. But if you don’t want to keep this relation, just check on the “Instanced as component” option to dissolve.

Buttons within “Self-symmetric” are used to define which plane the part itself is symmetrical about, which will affect the mirrored part’s orientation.

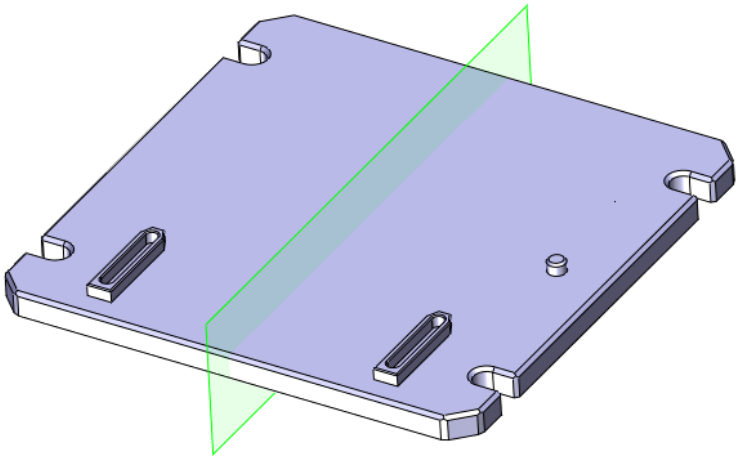

Dynamic Clearance Check Support

When you’re using “Drag” or “Rotate” to move around the component, you can turn on the new “Dynamic Clearance” option to inquire the clearance, i.e. the shortest distance, between the moving component and the reference component. The result will show up between the picked components and keep updating in real time during the movement.

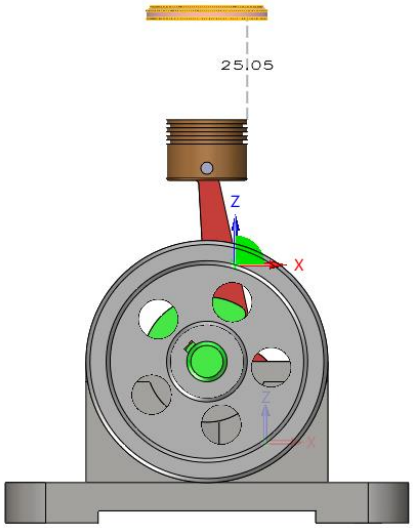

➔ Where to Find

Part/Assembly context > Assembly Ribbon > Drag or Rotate

★Editable "Assembly Cut"

"Assembly Cut" uses any shapes from the assembly itself or any child components to cut the picked components. Things about this features are:

- ✓ The assembly cut feature is listed within the assembly modeling history tree and has all functionalities that work on modeling history features, like redefinition, suppression or conditional suppression and so on.
- ✓ The outcome of the assembly cut feature can only exist within its parent assembly without effecting any original shapes of components, which makes the components look different from their origin.
- ✓ The assembly cut feature also can propagate into the modeling history of the selected components to change their original parts directly. This is one of the top-down design application.
- ✓ If the component receives an assembly cut feature in its model history, it is under an inter-part editing mode on which its existing modeling history will be locked to avoid any modification. If you want to modify the part, you need to dissolve this mode by unlinking

all assembly feature propagated from its parent assembly to break the association, which will make the inherited assembly feature converted into local modeling feature.

To use “Assembly Cut”, it’s recommended that you do that after you have complete the part design mostly and fully constraint the component in assembly. It helps to avoid unexpected result if the part changes its modeling course or the component is moved.

★New “Assembly Hole”

Just like the “Assembly Cut” feature, “Assembly Hole” is another tool to remove material from picked components. It has the same hole types as the “Hole” feature in part, and it can only exists within the assembly, which will not affect any original modeling course of the picked components.

Sheet Metal Design

★Reformed “Extrude”

The old “Extrude” is changed into 2 new extrusions, “Extrude Tab” and “Extrude Flange”

1. “Extrude Tab” uses a closed profile to create a tab. If the profile is on the planar face of a base tab, the thickness will be set as the base tab, and this secondary tab can be merged together.

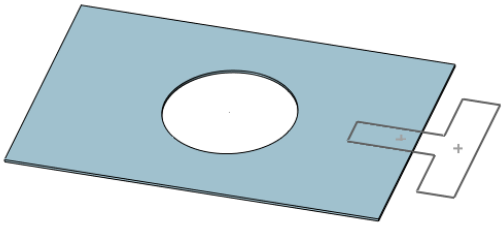

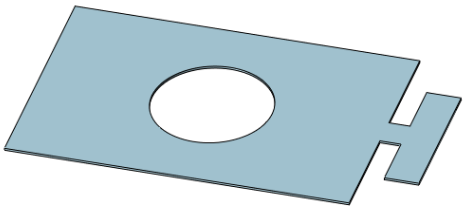

2. “Extrude Flange” uses an open or closed profile to create a flange. Straight corners will be automatically added bends with same radius. If the profile is closed, you can use rip option to pick a point from the loop to make a gap for unfolding.

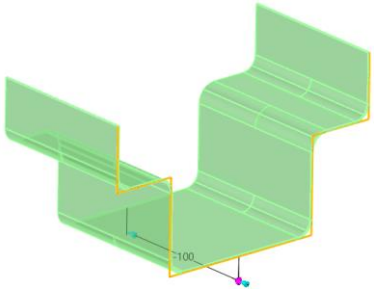

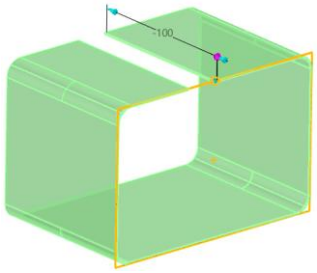

★New "Swept Flange"

Similar to Sweep, Swept Flange allows you to build a complex flange with an open sketch along edges of a stationary face. Here are some features of this command.

- ✓ The profile can be a sketch with any combination of line, arc and curve, but need to be open.
- ✓ The profile need to be perpendicular with the first segment of the Path and connected end-to-end with edges of the Path.
- ✓ Single edge or tangent edges from same stationary face can be picked as Swept Path.
- ✓ Bend will be added automatically at any straight corners of the profile.
- ✓ Flanges generated by sweeping on curved edges can't be unfolded for now.

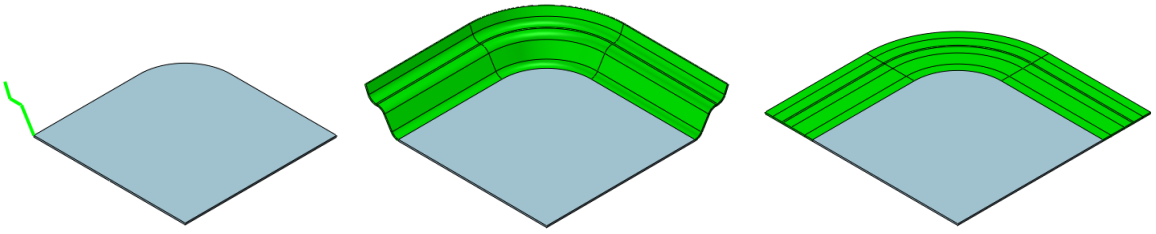

Changes in "Full Flange" and "Partial Flange"

1. **Relief in "Full Flange"**

   "Full Flange" now offers end conditions of relief for you to apply.

None	Rectangle	Obround

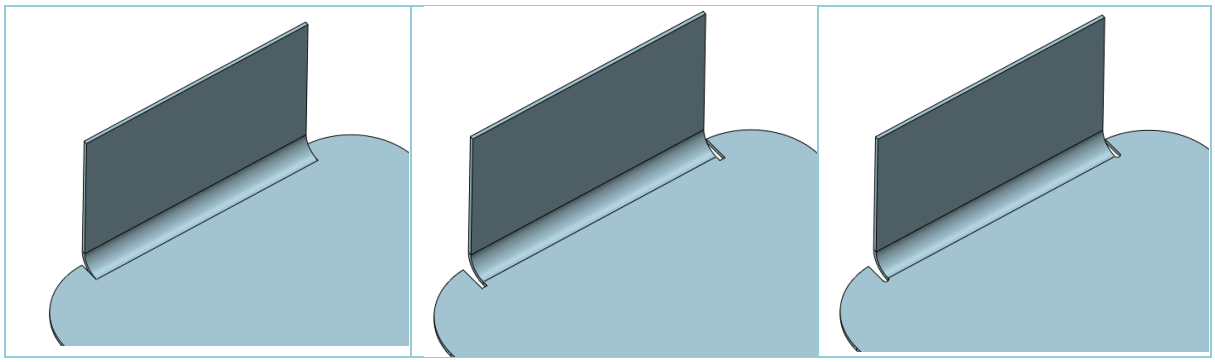

2. **Arc or circular edges support to build a "S Bend"**

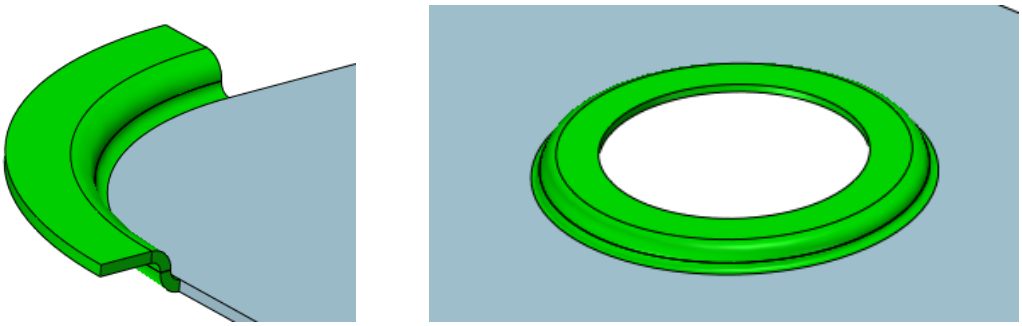

3. **New Position Control in "Partial Flange"**

   To better control the dimension of the partial flange, some new options are provided.

   - ✓ Start-End mode provides Start and End fields to allow you define how far the partial flange is from the ends of the Edge. The rest of the length of the Edge is the width of the flange.
   - ✓ Start-Width mode provide Start and Width fields to define the flange dimension. You can switch the start point from the 2 ends of the Edge.

★Upgraded "Close Corner"

The gap from the corner where two flanges meet needs to be closed. Besides closing the flange, the bends also need to close. The upgraded "Close Corner" in 2016 offers you ways to close the bends and flanges together. And also there are different kind of cutouts on the closed corner to relief stress concentration.

1. **Different forms to close**

There are 2 ways to close the corner. One is to use straight lines to form the outline of the cuter which is going to cut the corner on the unfold pattern, and that is good for the cutter manufacturing. The other, i.e. the “Miter corner” option, is to use curves to form the outline of the cuter, which is trying to meet the defined “Gap” around the corner but is not that easy to manufacture as the first one does.

Straight Outline - Fold	Straight Outline - Unfold	Curved Outline - Fold	Curved Outline - Unfold
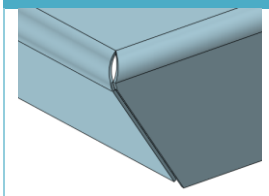	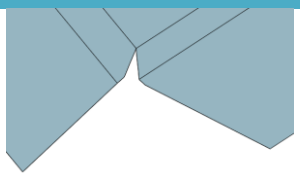	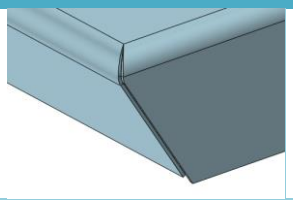	

2. **Close corner with “Gap”**

Original	Straight Outline with Gap	Curved Outline with Gap
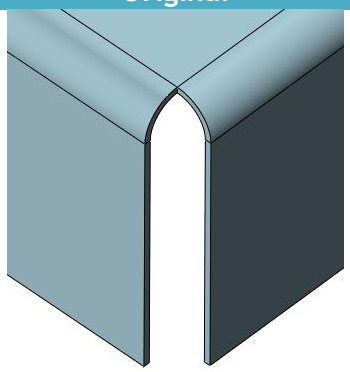	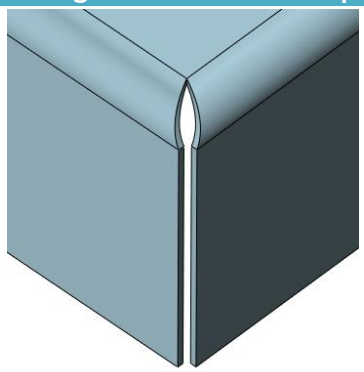	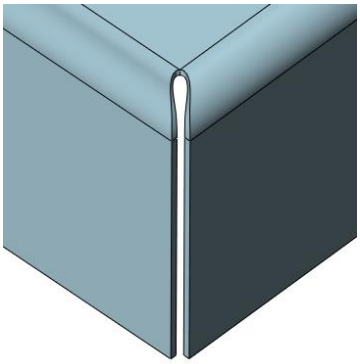

3. **Different forms of cutouts**

Relief	Fold	Unfold	Miter-Fold	Miter-Unfold
Unclosed	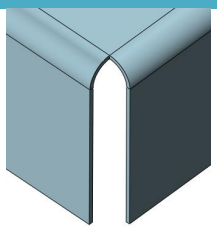			

Closed	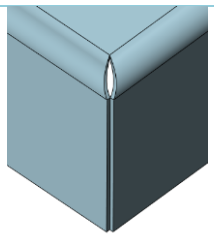	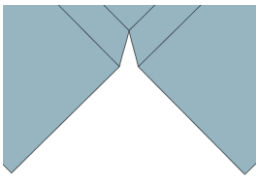	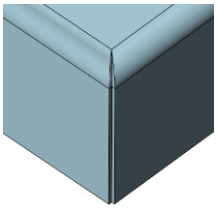	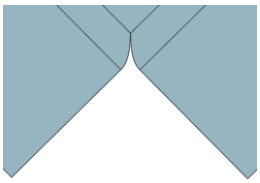
Circular Cutout	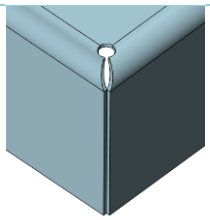	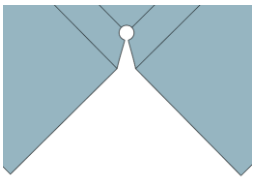	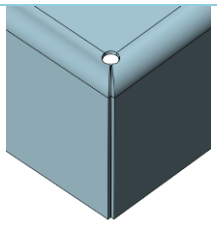	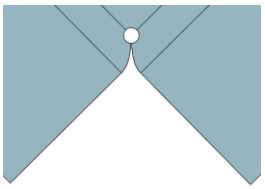
Rectangular Cutout	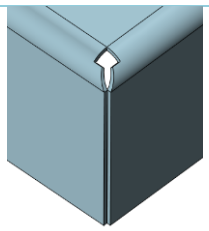	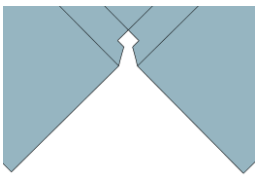	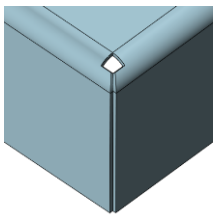	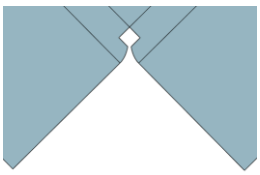
U Cutout	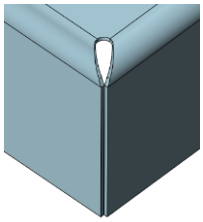		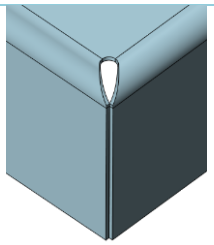	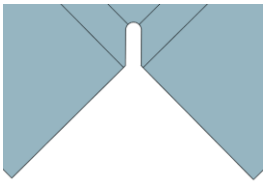
V Cutout	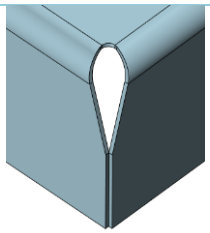	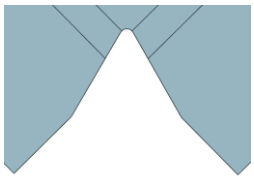	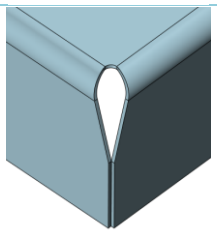	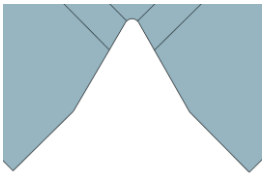

4. Closing all sub corners with the basic one with “Close the whole flange” option

Original	Just Close the Basic One	Close the whole flange

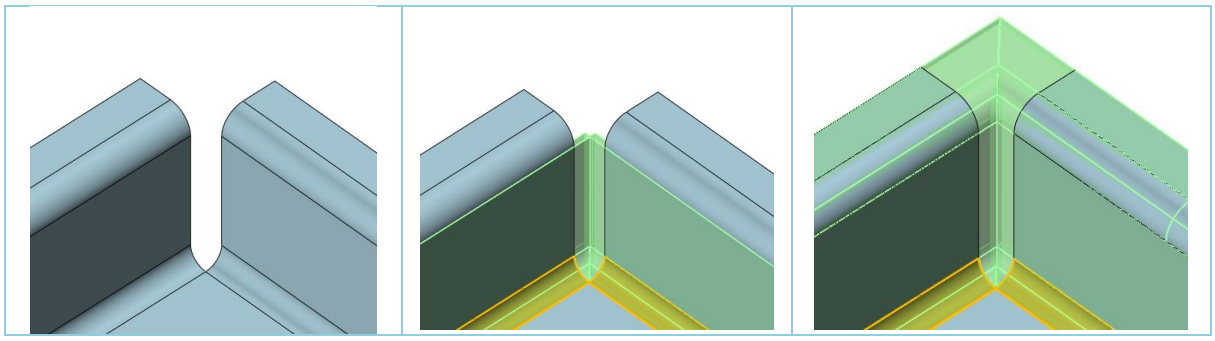

★Compound "Change Bend"

"Change Bend" have integrated "Change Bend Radius" and "Change Bend Angle" together. So both parameters of the picked bends can changed at one time.

2 new modification modes are added for you to keep the length unchanged as following.

- ✓ **"Fixed fold length"** – only bend radius of picked bends and geometries nearby will be changed keeping other dimensions of the fold shape unchanged. The unfold length is changed.

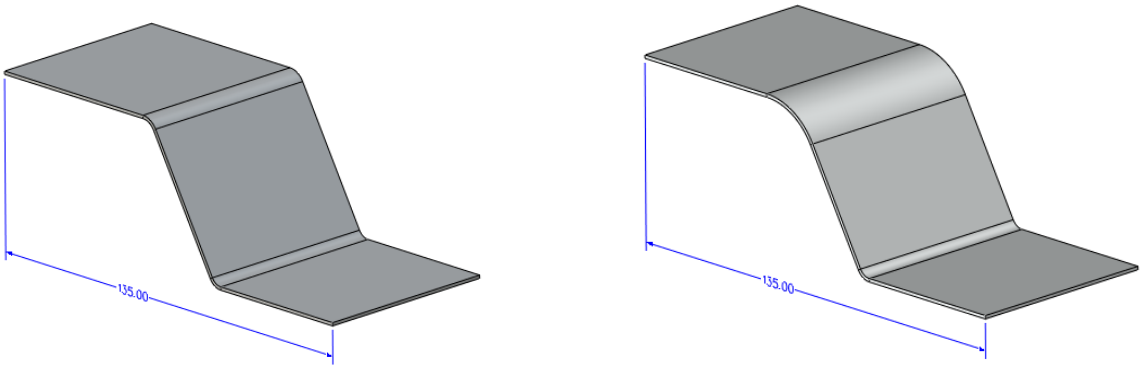

- ✓ **"Fixed unfold length"** – both bend radius and angle can be changed keep the over all unfold length of the shape unchanged.

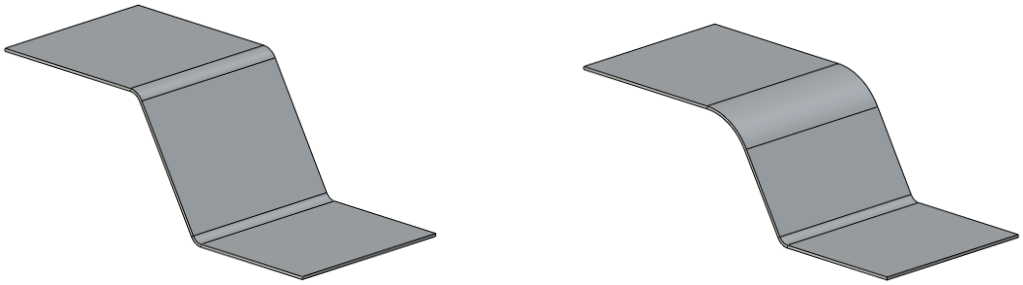

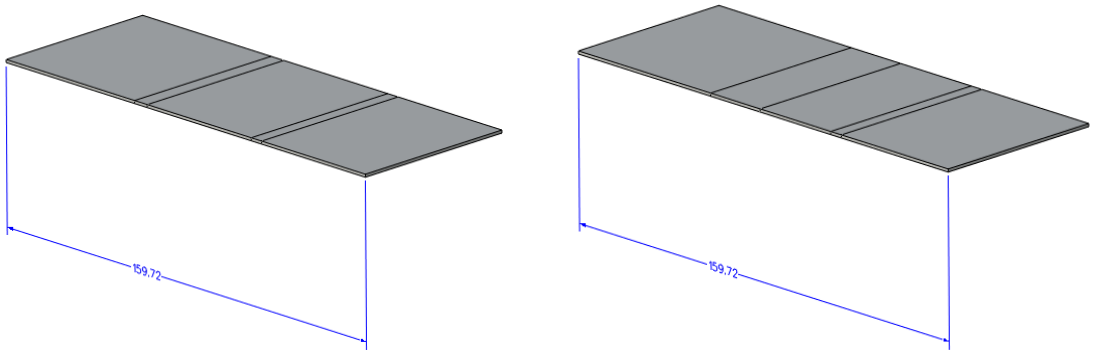

★Quick “Mark Bend”

Auto bend recognition now is provided for you to quick collect all valid cylindrical faces basing a defined stationary face on a picked model in this improved “Mark Bend”, which should save you lots of time. Manual selection for bend faces is still supported.

Bends with S profile now is supported to recognize. It’s recommended that imported sheet metal should be cleaned up some unnecessary divided faces with “Join Faces”.

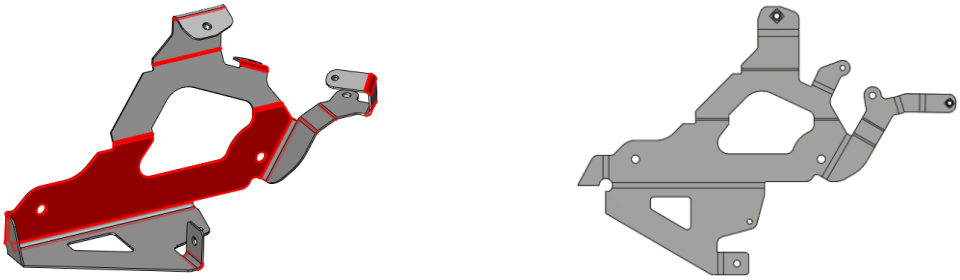

New “Rip” to Make a Gap

“Rip” is used to separate connected walls of some thin model with uniform thickness to make it possible and ready for converting into sheet metal and unfolding then.

Only linear edges from thin walls with uniform thickness, or lines on a planar face and connected with its edges, can be picked as object for this “Rip” feature.

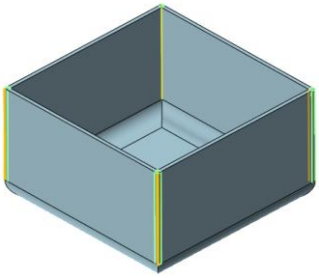

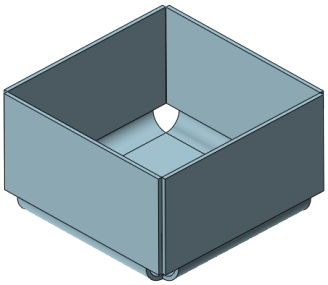

FTI

New “Linear Unfold”

Linear unfold is used to unfold or change the bend angle. And the bend is limited to cylindrical face or modified cylindrical face.

- ✓ **“add a new forming status”** – Check on this option will automatically copy a new sheet metal part and changed the unfold status in a specified location.

Option Off	Option ON
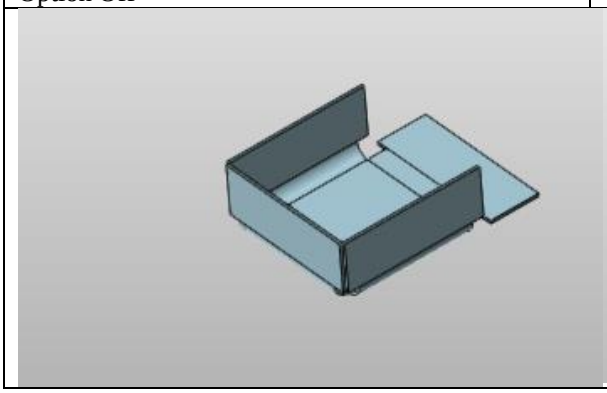	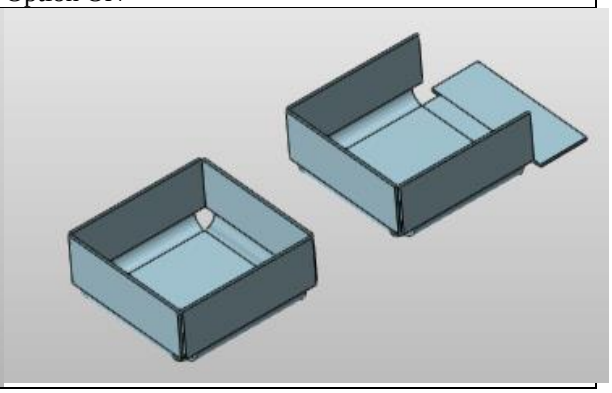

New “Advanced Unfold”

Advance unfold is used to unfold complex flange that cannot unfold by “linear unfold”, such as below, and advance unfold cannot change to bend angle.

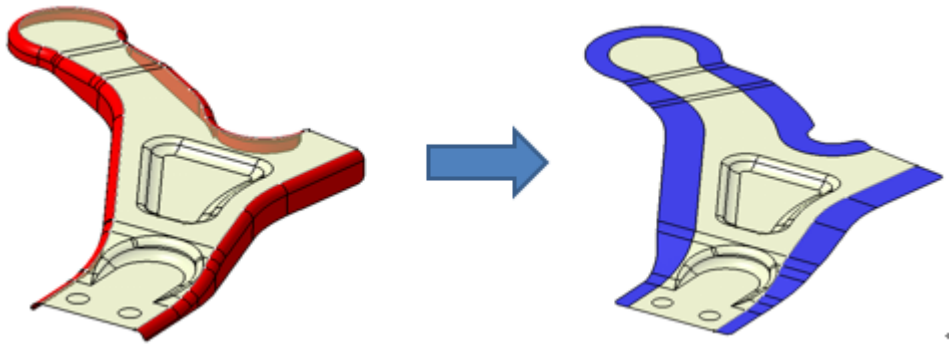

Faces to layout—to define which flange to unfold

Fixed edge—to define the boundary of the flange that do not changed during the unfolding.

Support faces—to define the location where the flange unfold to (plane or G1 connected surface)

- ✓ New "Support faces" is to create a support faces for advanced unfold process, it need to be created before doing advanced unfold

New "Forming Analysis"

The "Forming Analysis" uses different color to display sheet metal thickness result after the forming process. ZW3D provide 3 type of analysis model for user to check out

Thickness strain-- displays the percentage change in material thickness after the forming process

Thickness-- displays the material thickness after the forming process

Safe zone – used forming limit diagram to plot Major strain, Minor strain, Safe zone, wrinkle area with different color in 3D model directly, get a more intuitive result.

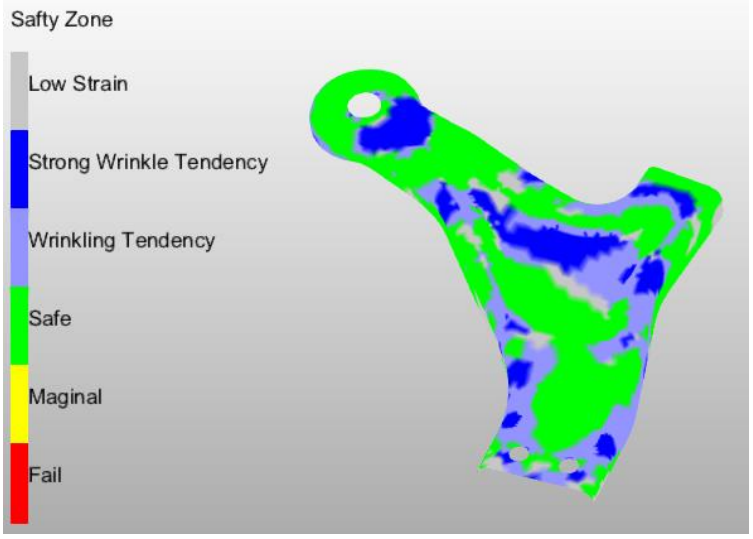

Point Cloud

New “Remove Box”

“Remove Box” is to remove points with a box defined by a center and a corner point.

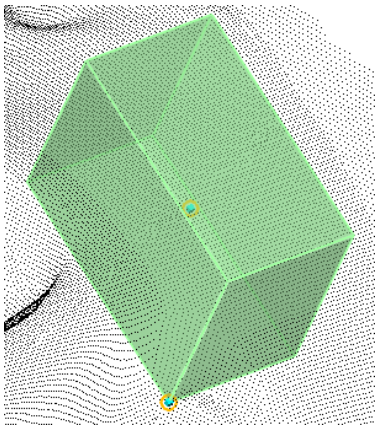

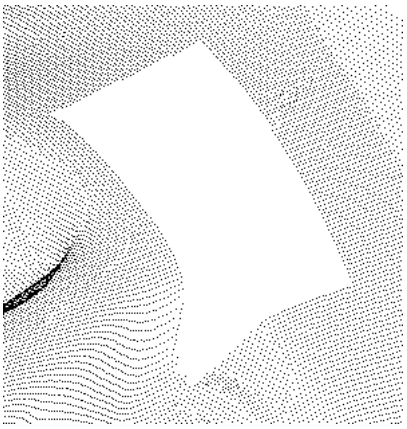

➔ Where to Find

Part context > Point Cloud Ribbon > Remove Box

New “Trace Silhouette”

“Trace Silhouette” extracts the outline of a STL model and convert into connected curves. It uses datum plane to define the view direction which you can create a new plane from its right-click menu.

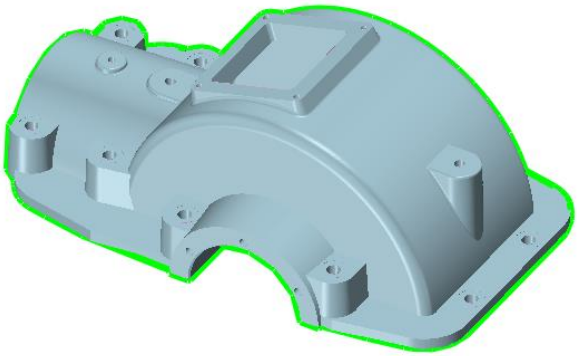

➔ Where to Find

Part context > Point Cloud Ribbon > Trace Silhouette

Drawing Sheet Design

Faster View Projection for Coincident Circular Edges

To continue…

★New “Crop View” command for Partial Views

“Crop View” is used to generate a partial view by trimming a drawing view with a defined boundary, so that you can concentrate on the portion of the part and give it a clear presentation.

- ✓ The drawing view used to crop can be any view except Break View and Detail View.
- ✓ 3 different boundary patterns are provided, Circular, Rectangular and Polyline.
- ✓ The boundary lines can be set up their attribute on the view attribute form, like their color, line type, width and layer.

- ✓ You can delete the crop view to restore the untrimmed status through the view right-click menu.
- ✓ You also can redefine the crop view with the Redefine Crop View command from the right-click.
- ✓ You can generate other views from a crop view.

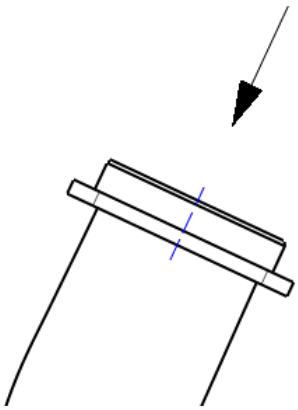

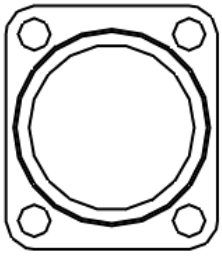

➔ Where to Find

Drafting context > Layout Ribbon > View

Drafting Context >  on a crop view > Attribute

Drafting Context >  on a crop view > Mini Bar

Auto Weld symbol in view projection

"Weld Bead" from Weldment can add a weld into a part. If the part is projected in the drawing sheet, this weld bead now can show up on the responding projection curves.

- ✓ Weldment symbols can be generated during the view projection if the Weld is defined in 3D part and the view is in Wireframe or Hidden line modes.
- ✓ Only visible Weldment lines generated from 3D Weldment projection have the Weld symbols if the button "Show bends from part" on the view attribute form is on.

- ✓ Section view and detail view don't support this auto Weld generation.
- ✓ The Weldment symbols created automatically by view projection won't keep the association with the one in 3D part.

➔ Where to Find

Drafting context > Layout Ribbon > Standard View > General > Show weld beads from part

★New "Move View to Sheet" to Relocate Views among Sheets

When a part is complex, it needs so much views to layout which one sheet have no enough room to accommodate that some of the views need to place on a different sheet. This is what "Move View to Sheet" does, to move views among sheets.

- ✓ All types of views except the Broken Section View can be moved among sheets.
- ✓ When moving a view, all its children objects like the children views, dimensions, symbol, table, will be moved together.
- ✓ When a view is modified or a sheet is regenerated, all children views of this view or the relocated views from this sheet on other sheets will be regenerated at the same time.
- ✓ There are 2 options for you to control how to do if there is a same label name conflict during view relocation, to rename or keep it.

➔ Where to Find

Drafting context >  on a view > Move Views to Sheet

Movable Label for Section and Auxiliary View

You can drag the label text of the section or Auxiliary View around to adjust their positions.

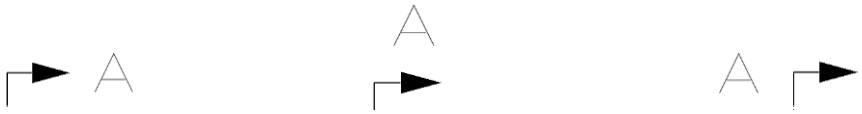

Auto Vertical or Horizontal Leader for Feature Control Annotation

2 new leader styles, “Vertical Leader” and “Horizontal Leader” have been added into “Feature Control” symbol

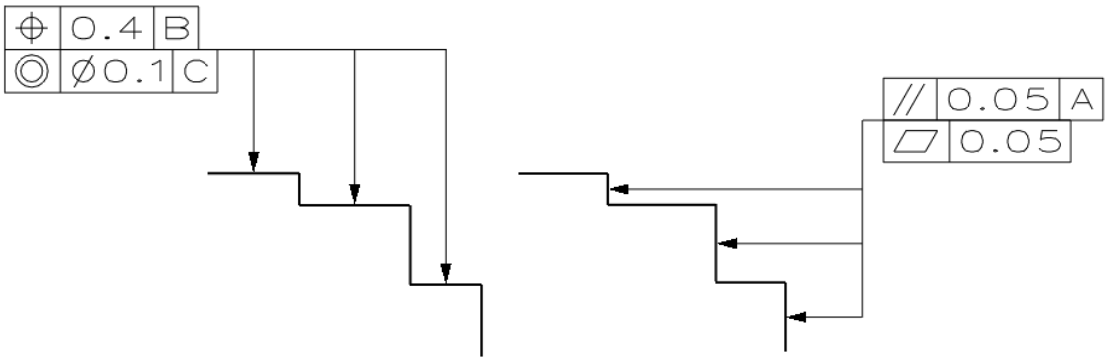

★More Symbols and New Layout for “Weld”

There is a new “Include in weld table” option to allow you to control whether the weld symbol will be listed in weld table, which means you can collect all the weld into a weld table for further management.

Multiple leaders are supported to dimension welds from different locations with one weld symbol. Multiple doglegs on dimension line are also supported.

Basing on ISO, ANSI, GB, DIN, JIS standards, weld symbols are renewed to include more technique symbols.

Weld layout has been re-arranged as following picture shown to better guild you to fill up all the weld technique elements.

✓ New ID line options:

- Plain

- ID Line Above 
- ID Line Below 

✓ New staggered symbol option 

✓ New box option in Tail widget 

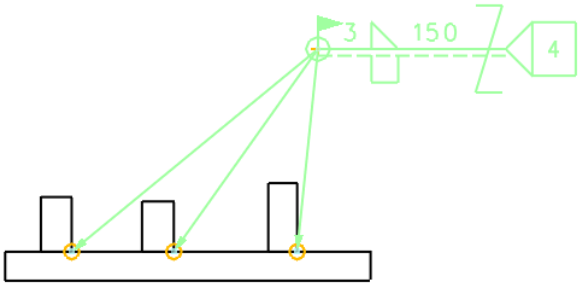

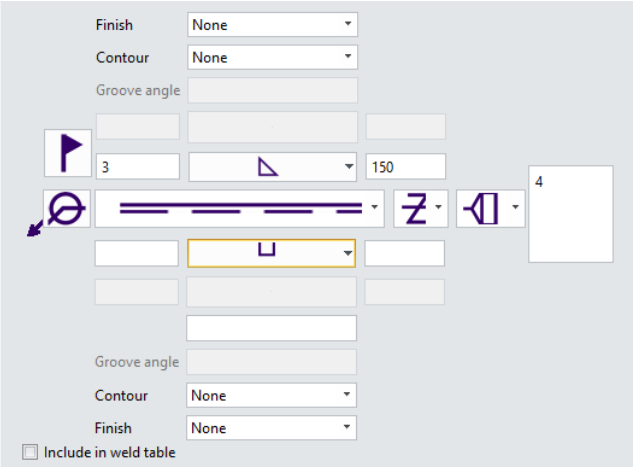

Dimension from PMI Annotation

If a part is dimensioned by PMI tools, its projection views on drawing sheet can inherit those dimensions directly. You can turn this feature on with the new “Inherit PMI” option on Standard View > Settings > Optional > Inherit PMI.

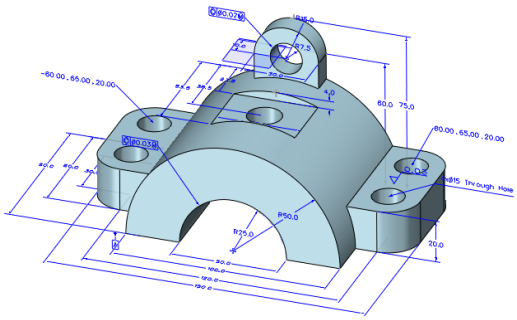

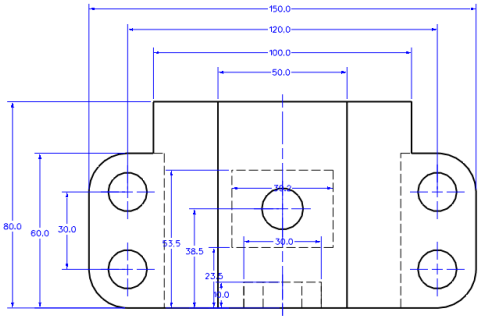

➔ Where to Find

Standard View > Settings > Optional > Inherit PMI

Drafting context >  on a view > Display others > Inherit PMI

★New "Auto Balloon"

To continue…

✓ **New "Underline" Style**

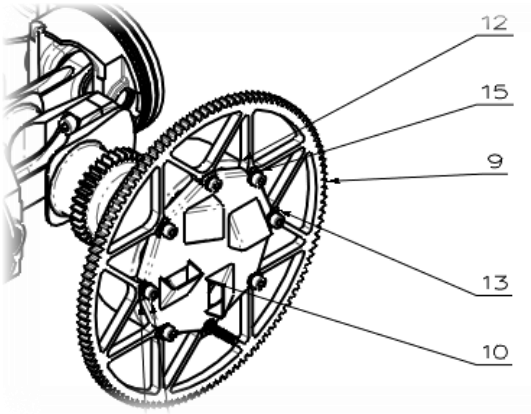

Enhanced "Balloon"

To continue…

★Updated BOM Table

To fit more practical applications, BOM has developed with more functionalities.

✓ **More controls for traversing assembly**

Options are provided to define which hierarchy of the assembly BOM should read into.

- ✧ **Top-level only** – only list out parts and sub-assemblies excluding the components from any sub-assemblies.

- **Parts only** – only list out all parts including the one from all sub-assemblies, but excluding any assembly components.
- **Indented** – list out all the parts and sub-assemblies and their components, and more further controls are provided.
  - 3 ways to define how to number the components from the sub-assembly

No numbering

ID	Name
1	ASSY piston+conrod
	DIN912-M8x1x35-12.9
	E022004A
	E023505A
	E024001A
	E024501A
	E025001A
	E025002A
2	BEARING
3	DIN912-M6x25-8.8-YP

Detailed numbering

ID	Name
1	ASSY piston+conrod
1.1	DIN912-M8x1x35-12.9
1.2	E022004A
1.3	E023505A
1.4	E024001A
1.5	E024501A
1.6	E025001A
1.7	E025002A
2	BEARING
3	DIN912-M6x25-8.8-YP

Flat numbering

ID	Name
1	ASSY piston+conrod
2	DIN912-M8x1x35-12.9
3	E022004A
4	E023505A
5	E024001A
6	E024501A
7	E025001A
8	E025002A
9	BEARING
10	DIN912-M6x25-8.8-YP

  - New "Max traverse depth" option to define which assembly level BOM should read out up to

✓ New "BOM Filter"

"BOM Filter" offers a way to screen out unwanted components by setting up conditions to generate a table which is used to do specified work. Part attributes and customized attributes are available for this filter condition.

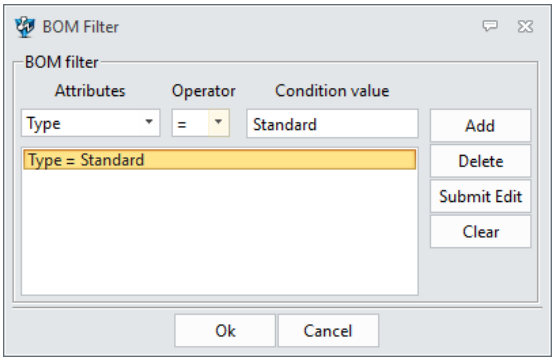

Total BOM			
ID	Name	Material	Quantity
1	ASSY piston+conrod	Aluminum	4
	DIN912-M8x1x35-12.9	Steel AISI 4140	2
	E022004A	Aluminum	2
	E023505A	Steel	1
	E024001A	Aluminum	1
	E024501A	Steel	1
	E025001A	Steel	1
	E025002A	Steel	2
2	BEARING	Steel	1
3	DIN912-M6x25-8.8-YP	Steel	8
4	E020501B	Steel	1
5	E021503A	Steel	1
6	E022501B	Steel	1
7	E023001B	Steel	1
8	E023002B	Steel	1
9	E051001A	Steel	1
10	E051502B	Aluminum	1
11	E052002A	Aluminum	12
12	E052501A	Steel	1
13	E052502A	Steel	1
14	NORDLOCK-M36	Steel	1
15	NORDLOCK-M6	Steel	8

Standard Parts					
ID	Name	Cost	Number	Quantity	Material
1	DIN912-M6x25-8.8-YP			8	Steel
2	NORDLOCK-M36			1	Steel
3	NORDLOCK-M6			8	Steel

✓ New "Custom Component" to pick drawing entities as components

Drawing entities picked together by the "Custom component" command from the table right-click menu work as one custom component listed inside the BOM table, which can be labeled by "Balloon" command.

Each entity picked by one "Custom component" command will be counted as on instance of the same component. Entities can be removed from a defined custom component with same procedure as adding.

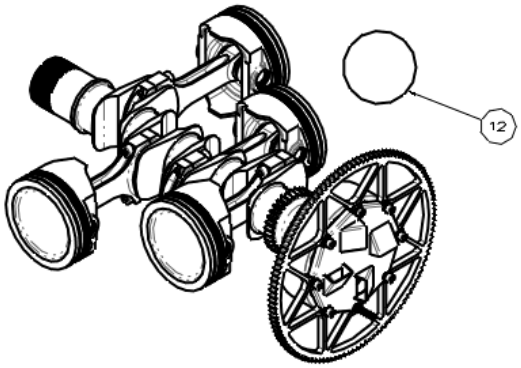

Total BOM			
ID	Name	Material	Quantity
1	E020501B	Steel	1
2	BEARING	Steel	1
2	NORDLOCK-M36	Steel	1
3	ASSY piston+conrod	Aluminum	4
4	E052501A	Steel	1
5	E023002B	Steel	1
6	E021503A	Steel	1
6	E051502B	Aluminum	1
7	E022501B	Steel	1
7	E052002A	Aluminum	12
8	E051001A	Steel	1
8	E023001B	Steel	1
9	E052502A	Steel	1
10	DIN912-M6x25-8.8-YP	Steel	8
11	NORDLOCK-M6	Steel	8
12	Custom Componet		1

✓ New "Display configurations of the same part as one item"

As what the section "Varied configurations of a component coexist within the same assembly" mentions, this new option is used to decide how to read out components with varied configurations.

✓ New "Keep missing item"

Missing components can remain on the BOM with this option, and add a strikethrough effect on the text of their rows to distinguish themselves.

✓ Multiple header row support

You can insert header rows as much as you want, and merge the cells within to form a table header as you like.

ID	Name	Quantity	Material	Mass	
				Per	Total
1	DIN912-M6x25-8.8-YP	8	Steel	0.01	0.06
2	NORDLOCK-M36	1	Steel	0.07	0.07
3	NORDLOCK-M6	8	Steel	0.00	0.01

✓ New table template

There is a new format "*.Z3BOMTT" to save a table template from an existing table. "Save as Template…" on the right-click menu of a table can save the picked table as a table template which you can reuse for another table generation.

✓ More attributes for column topics.

Following are the new column topics:

Mass, Volume, Total Mass, Part Config, Source file path

✓ Auto table split support

When a table is too big to accommodate within the sheet, "Auto Split" can used to split the table into several sub tables to fit the space. Sub tables can be re-merged back into one table.

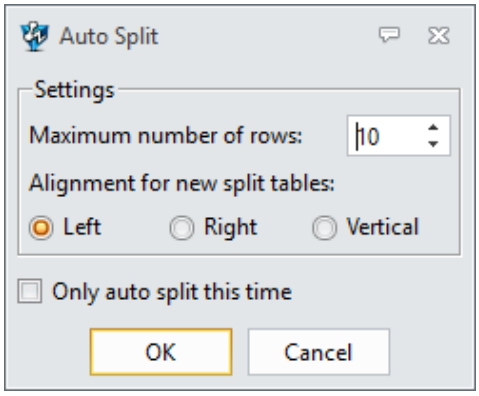

15	NORDLOCK-M6	Steel	8
14	NORDLOCK-M36	Steel	1
13	E052502A	Steel	1
12	E052501A	Steel	1
11	E052002A	Aluminum	12
10	E051502B	Aluminum	1
9	E051001A	Steel	1
8	E023002B	Steel	1
7	E023001B	Steel	1
6	E022501B	Steel	1
5	E021503A	Steel	1
4	E020501B	Steel	1
3	DIN912-M6x25-8.8-YP	Steel	8
2	BEARING	Steel	1
	E025002A	Steel	2
	E025001A	Steel	1
	E024501A	Steel	1
	E024001A	Aluminum	1
	E023505A	Steel	1
	E022004A	Aluminum	2
	DIN912-M8x1x35-12.9	Steel AISI 4140	2
1	ASSY piston+conrod	Aluminum	4
ID	Name	Material	Quantity
Total BOM			

7	E023001B	Steel	1
6	E022501B	Steel	1
5	E021503A	Steel	1
4	E020501B	Steel	1
3	DIN912-M6x25-8.8-YP	Steel	8
2	BEARING	Steel	1
	E025002A	Steel	2
	E025001A	Steel	1
	E024501A	Steel	1
	E024001A	Aluminum	1
	E023505A	Steel	1
	E022004A	Aluminum	2
	DIN912-M8x1x35-12.9	Steel AISI 4140	2
1	ASSY piston+conrod	Aluminum	4
ID	Name	Material	Quantity
Total BOM			

15	NORDLOCK-M6	Steel	8
14	NORDLOCK-M36	Steel	1
13	E052502A	Steel	1
12	E052501A	Steel	1
11	E052002A	Aluminum	12
10	E051502B	Aluminum	1
9	E051001A	Steel	1
8	E023002B	Steel	1
ID	Name	Material	Quantity
Total BOM			

✓ **Balloon separated from table**

Balloons will be generated by the new “Auto Balloon” and “Balloon” commands.

New “Structural BOM”

“Structural BOM” is used to generate the bill of all weld structures from a view.

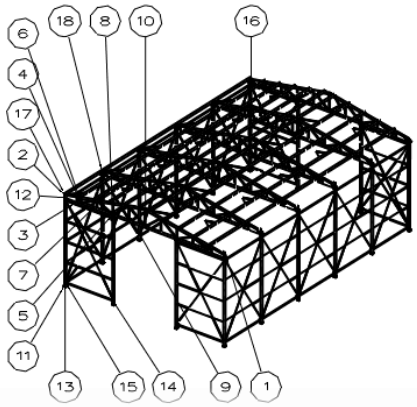

ID	Spec	Material	Mass[kg]	Length[mm]	Quantity
1	square tube,80 x 80 x 5	Aluminum	0.0073	5093.29	12
2	square tube,80 x 80 x 5	Aluminum	0.0001	163.34	2
3	square tube,80 x 80 x 5	Aluminum	0.0143	10020.00	6
4	square tube,40 x 40 x 4	Aluminum	0.0006	1096.87	24
5	square tube,40 x 40 x 4	Aluminum	0.0007	1291.25	24
6	square tube,40 x 40 x 4	Aluminum	0.0001	267.61	12
7	square tube,40 x 40 x 4	Aluminum	0.0002	450.70	12
8	square tube,40 x 40 x 4	Aluminum	0.0003	633.80	12
9	square tube,40 x 40 x 4	Aluminum	0.0004	816.90	12
10	square tube,40 x 40 x 4	Aluminum	0.0005	1000.00	6
11	square tube,80 x 80 x 5	Aluminum	0.0071	4980.00	18
12	Guesst 40X40X2	Aluminum	0.0001		18
13	square tube,40 x 40 x 4	Aluminum	0.0016	3000.00	70
14	Guesst 35X35X2	Aluminum	0.0001		27
15	angle iron,25 x 25 x 4	Aluminum	0.0010	5525.36	28

★New “Weld” Table

To continue…

CAM

Basic

CAM Manager

A new function similar as Layer Manager will be achieved in CAM module, some CAD utilities will be provided to edit the object in each layer. That means it is able to create auxiliary surfaces and boundaries based on the original part, it is also easy to add or remove some surfaces if user wants to change design. It will be convenient for user to manage and edit the machining objects.

- Avoiding environment unneeded nestification when enter CAD environment from CAM, now the most layers of nestification is 3.
- Support Copying Cam Component in CAM manager.

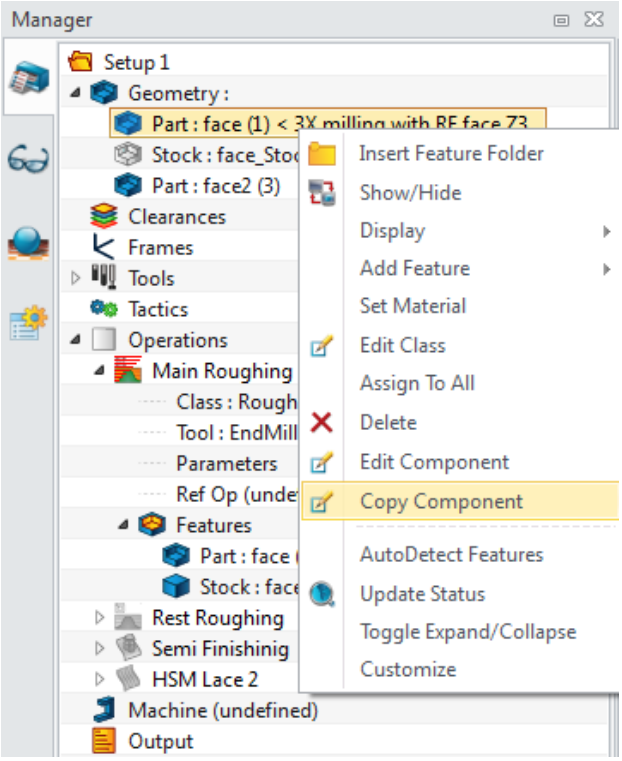

- Support inserting the rest material from solid verify as a stock CAM Component.

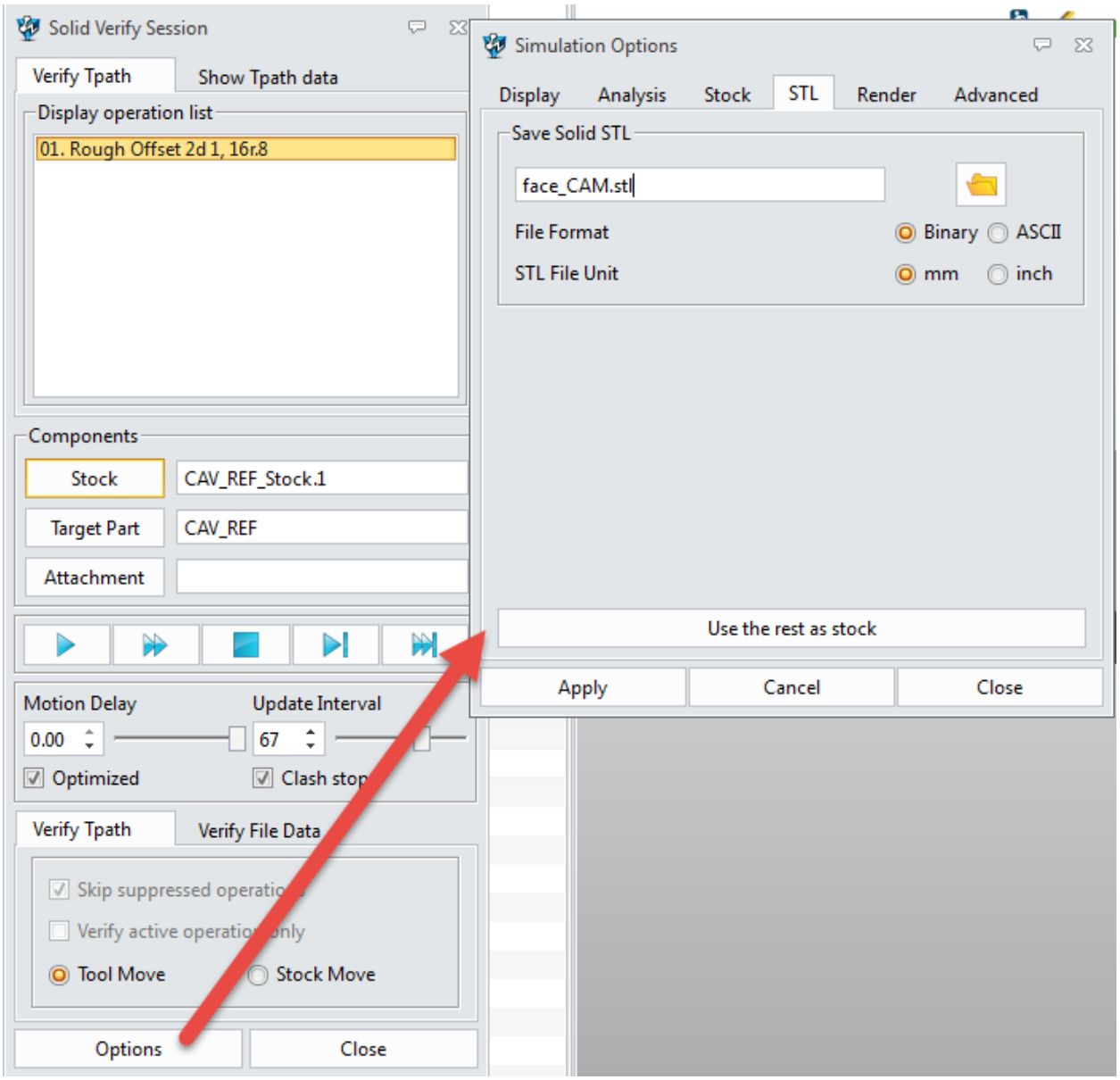

Generating Tool Path

- **3X Roughing in QM**

Improved Roughing Path Pattern Guide

As a result of uncompleted path pattern guide in previous version, when create roughing tool path, sometimes we can't get a reasonable result. So in this version, a new pattern guide is added and the other pattern type are improved.

- Part offset: Offset by only part boundary, the clean-up cut is similar with the offset (pattern filling) cut. When allow the tool past stock boundary, all the tool path will be started from the outside.

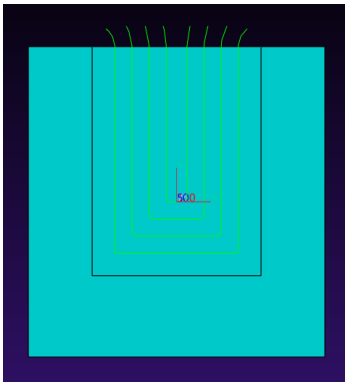

When a profile boundary is defined in the feature, it will be treated as part of the part boundary and offset together to generate the tool path.

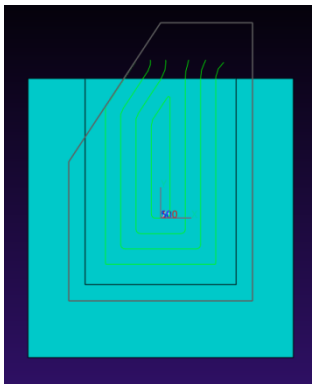

- Stock Offset: Consider keeping wave pattern, which has less tool lift. Cutting from the outside with Zigzag type. And add tool path in place that can't created by Zigzag.

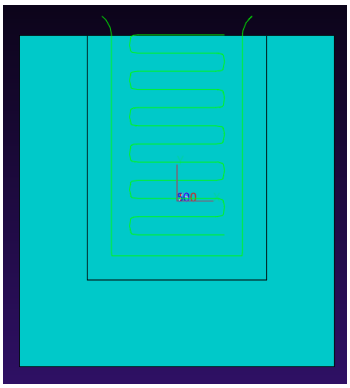

- Both offset: Offset by part boundary and stock boundary(like the part type in previous version), and add clean-up cut of part boundary.

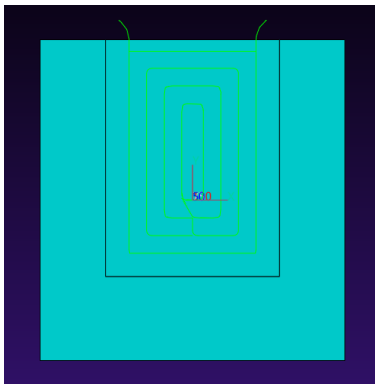

Tweaked "Cut Direction"

Roughing tool path always includes two parts: pattern-filling and clean-up. So two different parameters will be offered to control in these two parts of tool path.

- ✓ Cut Direction: control the direction of clean-up cut in open region.
- ✓ Open Pocket Mode: control the direction of pattern-filling cut. The profile need to be connected end-to-end with edges of the Path.

Tweaked “Spans in Cut Levels”

The spans in each cut level in offset pattern will be smoother and each layer will be more consistent.

2015SP	2016

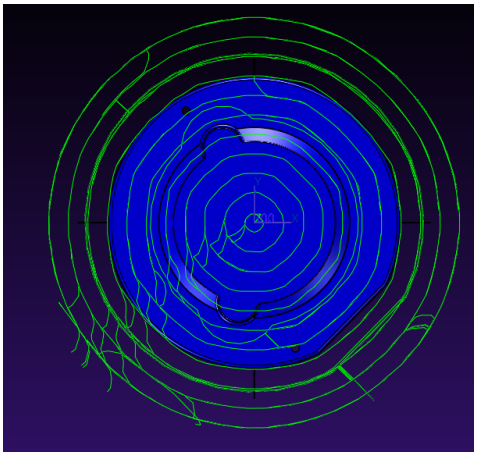

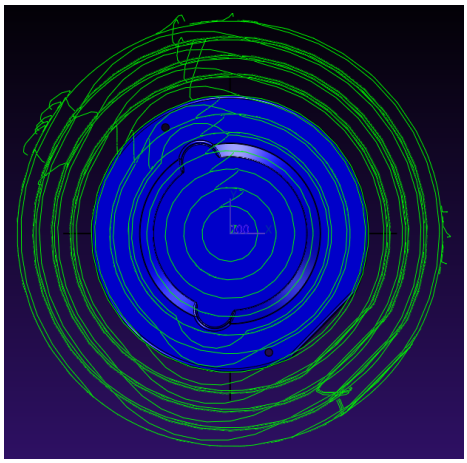

Simplified "Boundary" Settings of Roughing

Cut regions depend on the stock boundary and the containment boundary defined by user. In previous version, the cutting region is controlled by the too many conditions. It's very hard to understand and easy to use. In this version, the boundary setting is simplified. In the parameter setting, there is only limit the tool inside or outside the stock boundary.

2015SP

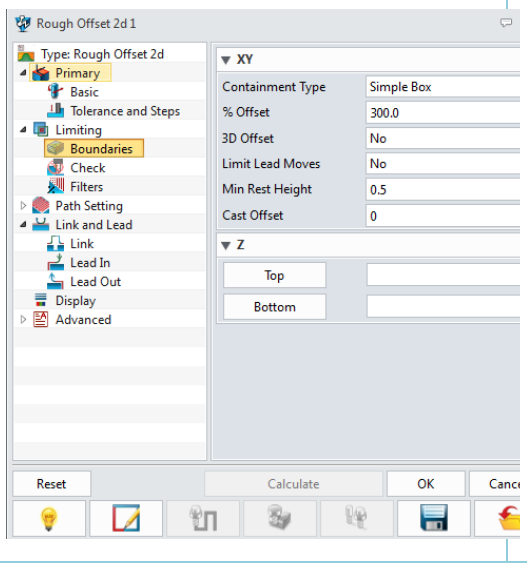

2016

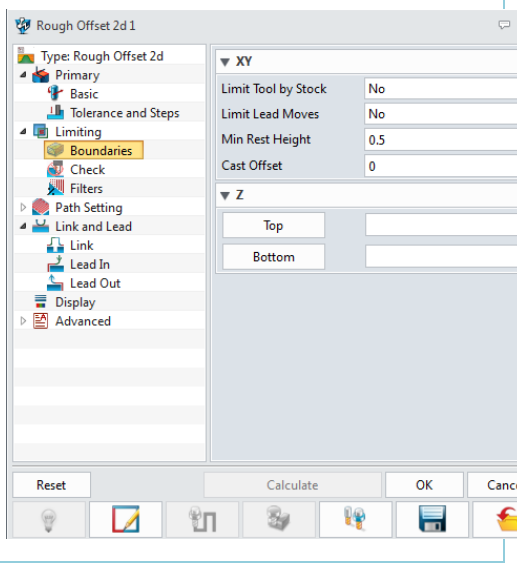

a) Stock Boundary

The settings of stock will be simplified into two options which are easy to understand and enough to control the machining region in Roughing:

- Yes: contain the center of the tool in the boundary
- No: allow the tool to be outside of the boundary to machine completely

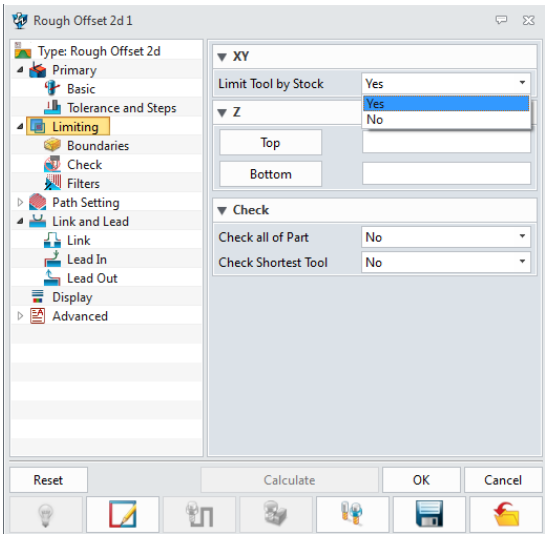

The result is shown like below.

Limited tool by stock (Yes)	Limited tool by stock (No)
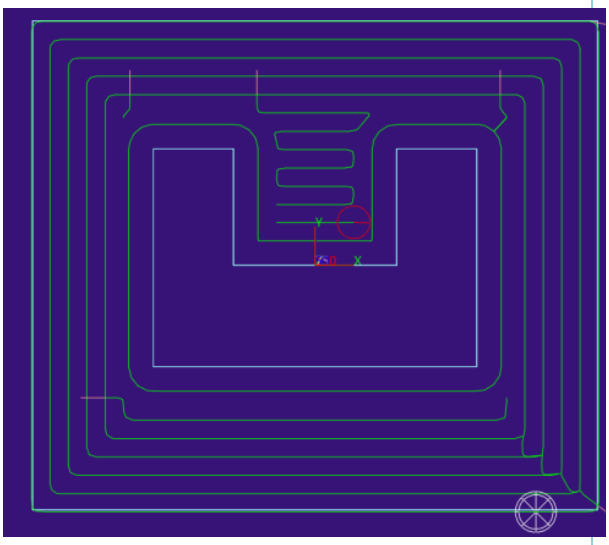	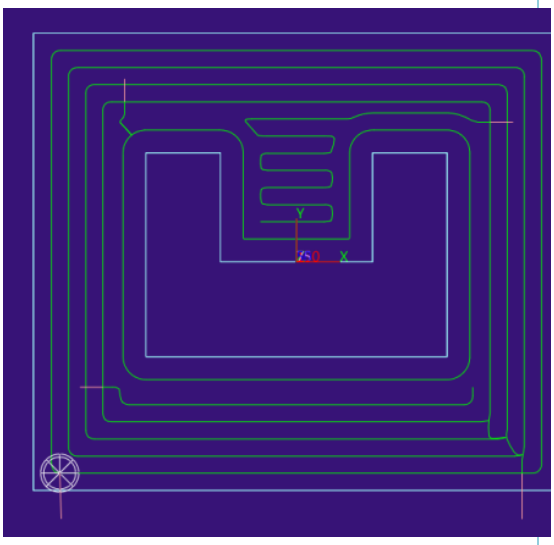

b) Containment Boundary

Besides, the containment boundary will be enhanced that the Containment Types including Silhouette, Simple Box, and Containment are easy to controllable and limit the tool path.

Improved " Link and Lead"

To improve the Link and lead in of Roughing, a dynamic analysis will be helpful to avoid unnecessary high lift and ramp-arc . For example, the ramp height of each level should be relative value depended on the cut-down step. Since the previous cuts have removed some material, the height of tool lift and the lead in should be calculated on the rest stock.

- Improve the link to spline between clean-pass and the region tool path.
- Improve lead-in along tool path. If the tool path is too narrow, then it will automatically expand to outside.

New Cut Order Option

When there are lots of regions or sub-regions in the machining part, the order settings will be needed to control the cut sequence in the cases with plenty of sub region so that the tool lift will be more ordered.

X/Y axis, OneWay: create link along X or Y direction in one way

X/Y axis, Zigzag: create link along X or Y direction in zigzag way

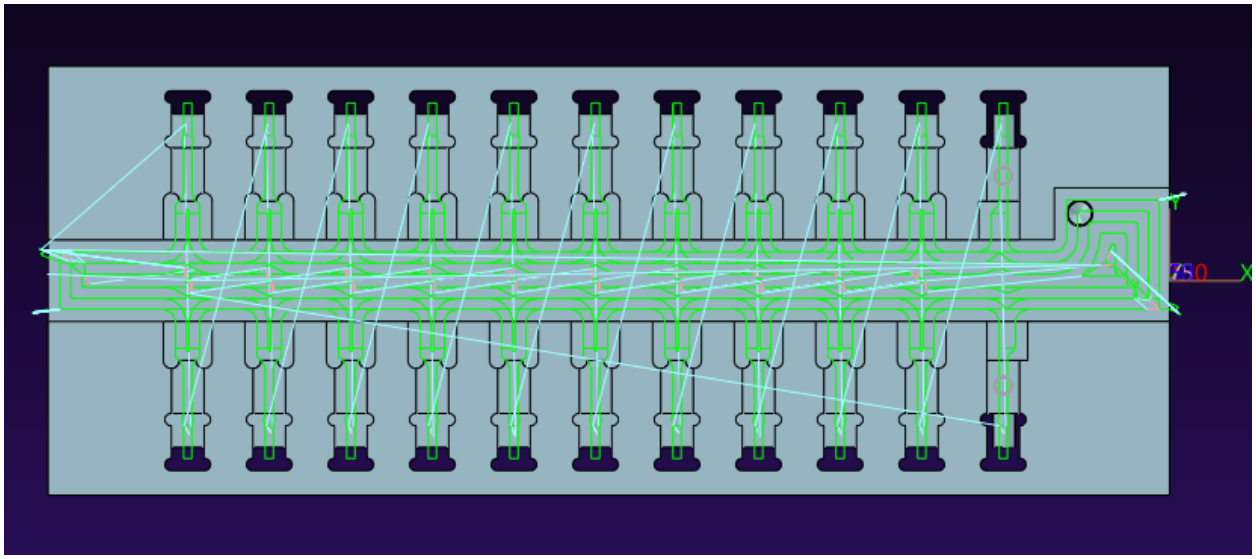

Finishing For 3X Quick Mill

Tweaked “Angle Detection”

The region of angle range will be detected on CL surface of machining tool, which means 3D containment will be created on CL surface. And the angle detection of Ball tool, BullNose tool and Flat End tool will be improved to be exact.

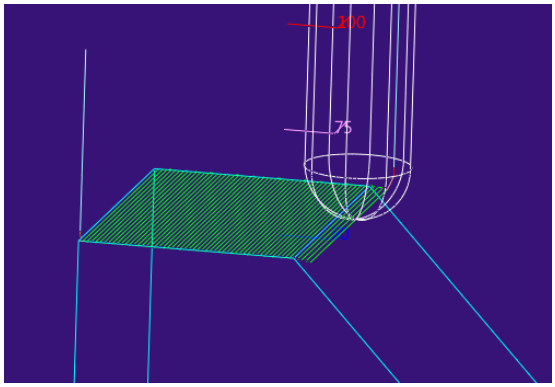

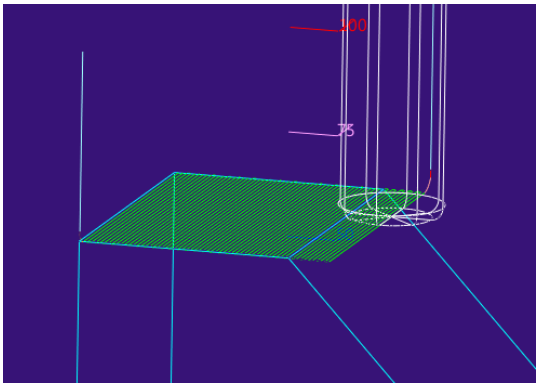

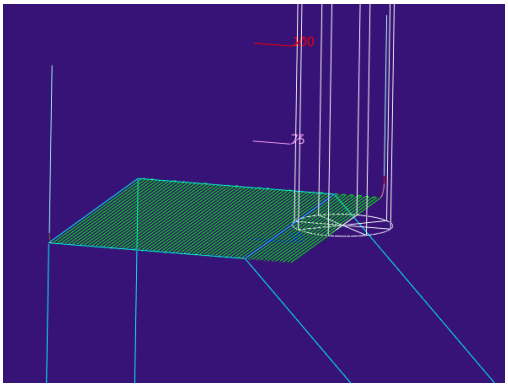

Reference Tool

With Min Rest Height, a 3D containment will be created on rest material of reference tool. The 3D containment on CL surface will be calculated to create reference tool path and the machining tool will contact to the 3D containment on rest material.

Cut Contact

Sometimes user wants to create tool path which contact to the selected boundary on the part and machine the regions completely. The 3Dcontainment on CL surface will be converted from the part boundary tool based on cut region.

When user selects a boundary on part surface, the cut region will be determine like #A or #B. If there is one profile, the region is inside, so the cut-contact containment is #A, shrunk from the original profile. When there are two profiles, the region is between them, so the cut-contact containment is #B, the same as the original profile.